5.5V-100V Vin, 1.8A Peak Current Limit, High Efficiency Asynchronous Step-down DCDC Converter

LKG XKY

- F XST 8 _dc AP VT) E E
- < PgX d dc_dcE dPVT) E
- 0 2 cXd db dc_dc 2 daaT c
- 0 TPZ 2 daaT c X Xf WT E8+% E
- 8 cTVaPcTS (& 7 XWB XST f Ta< B54C
- (d0 dXbRT c 2 daaT c
- E 5TTSQPRZ ATUaT RT E dPVT
- b 8 cTa P B UcbcPacCX T
- 5XgTS Bf XRWXV 5aT dT Rh Pc (: 7i
- 2 C 2 ca < ST f XW 8 cTVaPcTS _ 2 _T bPcX
- aTRXX 4 PQT CWaTbW S U a a VaP PQT 8 _dcE dPVT D STaE dPVT RZ dc a cTRcX DE CWaTbW S P S 7hbcTaTbX
- 2 hRT Qh 2 hRT 2 daaT c X XXV
- eTaE dPVT a cTRcX
- eTaCT _TaPcdaT a cTRcX
- 0 ePXPQT X P 4B PRZPVT

GVVROI G OUTYF

- E 3 XcaXdcTS f Ta 3 T XTah 1 db
- 1 PcTah < P PVT T cBhbcT T 1 XT BR cTa
- < c a 3 aXTb 3 a Tb

KYI XOV OUTF

CWT B2C 0 & X P Pbh RWa db QdRZ R eTaTaf XW f XST X_dc e dPVT aP VX V Ua E c E f WRW PRR SPcTb P ePaXch U bcT _ S f P __ XRPcX b PZX V X XSTP U a Pdc cXT XSdbcah P S XWcXV P __ XRPcX b CWT B2C 0 & XcTVaPcTb P (& WXW bXST < B54C P S WPb 0 _TPZ dc_dc RdaaT c X X f WT E8+% E c bd__ acWXW _TPZ RdaaT cP __ XRPcX

CWT B2C 0 & PS _cXV cWT R bdP c cX T 2 C ST R ca f XW XcTVaPcTS _ R _T bPcX VaTPch bX _ XXb cWT R eTaTa UURWX_R UXdaPcX

CWT B2C 0 & UTPcdaTb d bT 5aT dT Rh < Sd PcX 5< ST Pc XWc PS f XW ch_XP (d0 f dXbRT c RdaaT c f WRW T PQTb cWT R eTaTa c PRWXeT cWT WXW_ f Ta TUURXT Rh SdaXV XWc PS a PS R SXX b

CWT B2C 0 & UTab RhRT Qh RhRT RdaaT c X X cWTa P bWcS f _a cTRcX dc_dc eTae dPVT _a cTRcX P S X_dc e dPVT d STae dPVT _a cTRcX CWT STeXT X PeP XPQT X P _X cWTa P h T VP RTS 4B _PRZPVT

F

VOI GRIG VVROI G OUTF

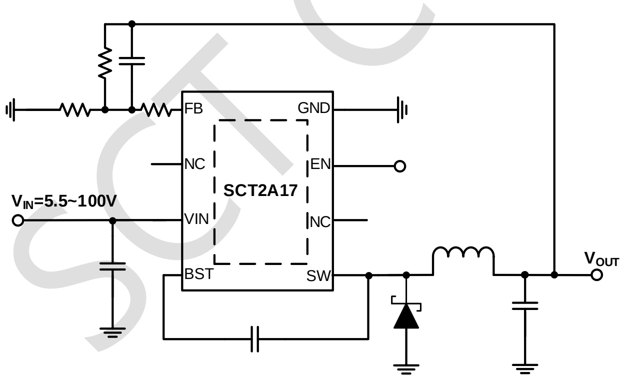

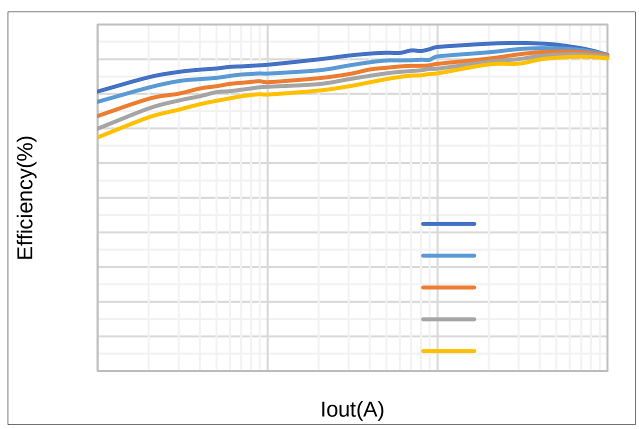

XK OYOUTENOY UX EF

= C4) PVT d QTab U a_aTeXdb aTeXbX b Ph SXbUTaUa _PVT d QTab X cWT RdaaT ceTabX

ATeXbX)2dbc TaBP _T

ATeXbX)D_SPcT 3 4E 82 4 A3 4A 8=5 A< 0C8 =

K OI KFUX KXFOTLUXS G OUTEF

SCT CONFIDENTIAL

XKIUS S KT K FUVKXG OTMHUT O OUTYF

eTa _TaPcXVUaTT PXacT _TaPodaT aP VT d Tbb cVTaf XT cTS

E8=	8 _dce dPVT aP VT			E
E DC	dc_dce dPVT aP VT			E
C9	_TaPcXVYd RcX cT _TaPodaT			2

KY EXG OTMYF

E4B3	7d P 1 Sh< ST 71< _Ta0=B894342 9B b_TRKKPcX P _Xb			ZE
	2VPaVTS 3TeXRT< ST 23< _Ta0=B894342 9B b_TRKKPcX P _Xb			ZE

(1) 94342 S Rd T c94 bcPcTb cVPc E 71< P f b bPUT P dUPRcdaXVf XWP bcP SPaS 4B3 R ca _a RTbb
(2) 94342 S Rd T c94 &bcPcTb cVPc E 23< P f b bPUT P dUPRcdaXVf XWP bcP SPaS 4B3 R ca _a RTbb

NKXS GRFOTLUXS G OUTF

A 90	9d RcX c P QXT ccVTa P aTbXdP RT	(	2 F
9C	9d RcX c c _RVPaPRcTaXPcX _PaP TcTa		
91	9d RcX c Q PaS RVPaPRcTaXPcX _PaP TcTa	&	
A 92c_	9d RcX c RPbT cVTa P aTbXdP RT	& ((	
A 91	9d RcX c Q PaS cVTa P aTbXdP RT	(	

B2C _a eXSTb A 90 P S A 92 d QTab h Pb aTUTaT RT c TbcX PcT Yd RcX cT _TaPodaTb UcVT STeXRTb A 90 P S A 92 PaT cP RVPaPRcTaXcR U_PRZPVT XbTU Qdc U P h cVTabhbcT TeT RVPaPRcTaXcXb bdRVPb cVT STbX P S Ph dc UcVT _aXcTS RXaRdXc Q PaS 21 f VRVcVT B2C 0 &Xb d cTS cVTa P _PS bXT P S TgcTa P T eXa T cP UPRc ab CVT 21 Q PaS XbP WTPcbXZ cVPcXb STaTS c cVT TPSb P S cVTa P _PS UcVT B2C 0 & 2VP VXV cVT STbX aR UXdaPcX UcVT 21 Q PaS RVP VTb cVT TUURXT Rh UcVT WTPcbXZP S cVTaTU aT cVT PRcdP A 90 P S A 92

SCT CONFIDENTIAL

VCI GRH NGXGI KXOY CI YF

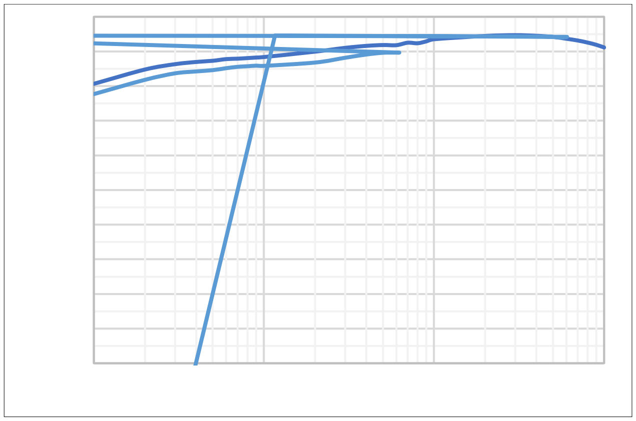

5XdaT 4URX Rh eb PS 2daaT c E dc E

5XdaT 4URX Rh eb PS 2daaT c E dc E

5XdaT PS ATVd PcX EX, E E dc E

5XdaT PS ATVd PcX EX, E E dc E

5XdaT % XT ATVd PcX 8 dc 0

5XdaT & Bf XRWXV 5aT dT Rh eb EX E dc E

F

SCT CONFIDENTIAL

L TI OUTGRHRUI F OGMXGS F

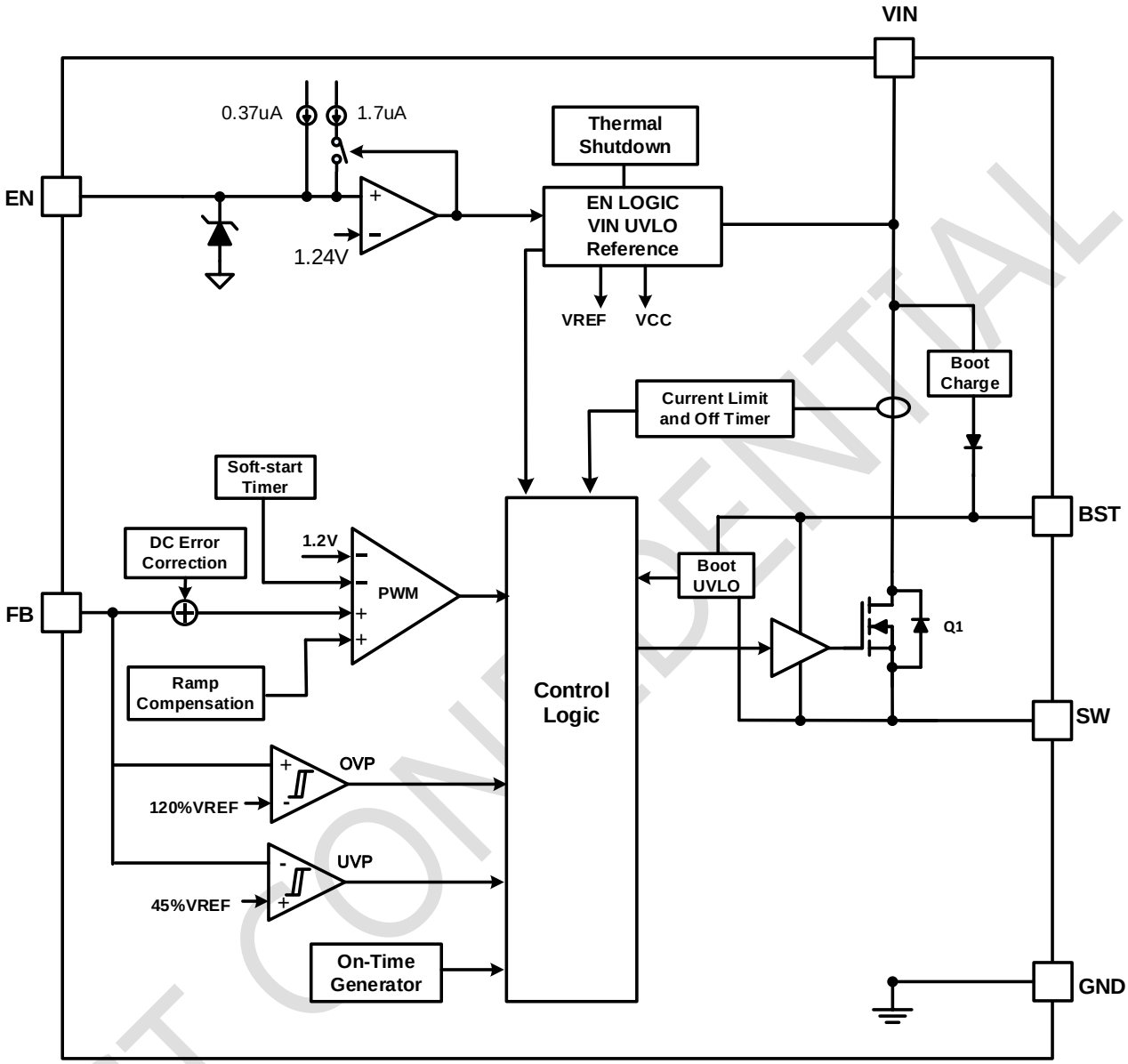

F

5XdaT 5d RcX P 1 RZ 3 XRVaP

SCT CONFIDENTIAL

CWT B2C 0 & aTVdPcTb cWT XcTa P aTUTaT RT e dPVT Pc E CWT dc_dce dPVT Xb bTcQh P aTbXc aSXeXSTaUa cWT dc_dc STc cWT 51 _X 8cXb aTR T STS c dbT c TaP RT aQTcTaaTbXc ab DbT 4 dPcX c RP Rd PcT aTbXcP RT UaTbXc aSXeXSTab C X _a eT TUUXRXT Rh Pc XWc PSb PaVTaeP dT aTbXc ab PaT aTR T STS 7 f TeTa XUcWT eP dTb PaT c WXVW cWT aTVd Pc af X QT aT bdbRT_cXQT c XbT PUUTRcXV dc_dce dPVT PRRdaPRh

f WTaT

- A_{51NC} Xb cWT aTbXc aR TRcXV cWT dc_dcc cWT 51 _X
- A_{51N1} c Xb cWT aTbXc aR TRcXV cWT 51 _X c cWT Va d S

CWT B2C 0 & XcTVaPcTb P XcTa P b UcbcPac RXaRdXc cWPc aP _b cWT aTUTaT RT e dPVT Ua iTa e db c E aTUTaT RT e dPVT X b 8UcWT 4= _X Xb _d TS QT f E bf XRWXV bc _b P S cWT XcTa P b UcbcPac aTbTcb CWT b UcbcPac P b aTbTcb SdaXV bWdcS f SdT c cWTa P eTa PSXV

0 TgcTa P Q dbcaP_RP_PRXc aQTcf TT 1 C_X P S BF _X _ f Tab cWT U PcXV VPcT SaXeTac WXVWbXST _ f Ta < B54C CWT Q dbcaP_RP_PRXc ae dPVT Xb RWPaVTS Ua P XcTVaPcTS e dPVT aTVd Pc af WT WXVWbXST _ f Ta < B54C Xb UU

SCT CONFIDENTIAL

RXRdXR _PaTb cWT 51 _X e cPVT c cWT XcTa P aTUTaT RT e cPVT F WT 51 e cPVT TgRTTSb UXcTa P E aTUTaT RT e cPVT cWT WXWbXST < B54C cda b Uc Pe XS dc_dce cPVT R cXdT c XRaTPbT F WT cWT 51 _X e cPVT UP b QT f UcWT E aTUTaT RT e cPVT cWT WXWbXST < B54C RP cda PVPX

CWT B2C 0 & _a cTRcb cWT STeXRT Ua cWT SP PVT SdaXV TgRTbbXT WTPcP S _ f TaSXbX_PcX R SXX b RT cWT Yd RcX cT _TaPcdaT TgRTTSb 2 cWT XcTa P cWTa P bT b abc _b _ f Ta< B54Cb bf XRWXV F WT cWT Yd RcX cT _TaPcdaT UP b QT f 2 cWT STeXRT aTbcPacb f XcWXcTa P b UcbcPac _WPbT

SCT CONFIDENTIAL

GVVRCI G OUTFOTLUXS G OUTF

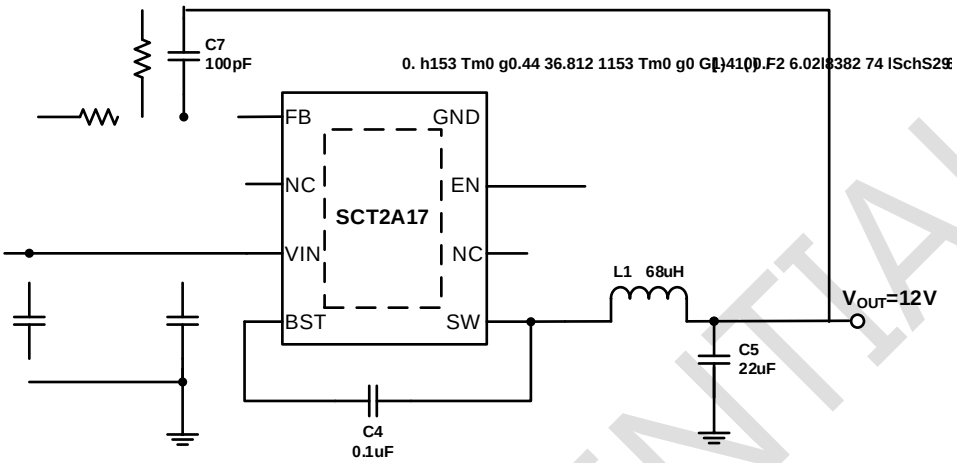

8 _dcE dPVT	E = a P E c E
dc_dcE dPVT	E
< PgX d dc_dc2 daaT c	0
Bf XRWXV 5aT dT Rh	(: 7i
dc_dce dPVT aX _T _TPZ c _TPZ	E
CaP bXT cATb_ bT 0 c & 0 PS bcT_	E dc, %(E

SCT CONFIDENTIAL

CWT dc_dce dPVT X bTcQh P TgcTa P aTbXc aSXeXSTa A P S A X dh_XRP P__XRPcX bRVT PcXR ATR T STS A aTbXdP RT X : DbT 4 dPcX c RP RdPcT A

f WTaT)

- E A45 X cWT UTTSQPRZ aTUTaT RT e dPVT U E

0 TgcTa P e

Table 1. R_1, R_2 Value for Common Output Voltage (Room Temperature)

E	(:	:
E	& :	:
E	(:	:

SCT CONFIDENTIAL

SCTC

CWT SXST dbcPb QT bT TRcTS f XWP P__a _aRcT _ f TaaPcXV CWT SXST R SdRcb cWT dc_dcRdaaT cSdaXV cWT UUcX T UcWT XcTa P _ f Tabf XRW CWT UUcX T UcWT XcTa P bf XRWX P Ud RcX UcWT PgX d X_dc e cPVT cWT dc_dce cPVT P ScWT bf XRWXVUaT dT Rh CWT dc_dcRdaaT cSdaXV cWT UUcX T X d cX_XTS Qh cWT Uaf PaS e cPVT UcWT SXST c RP Rd PcT cWT XbcP cP T db R SdRcX bbTb UcWT SXST 0 c WXWWTa bf XRWXV UaT dT RXb cWT PR bbTb UcWT SXST TTS c QT cPZT Xc PRR d c CWT PR bbTb UcWT SXST PaT SdT c cWT RWPaVXVP S SXRWPaVXV UcWT Yd RcX RP_PRXP RT P S aTeTabT aTR eTah RWPaVT 4 dPcX X dbTS c RP Rd PcT cWT c cP _ f TaSXbX_PcX XRdSXV R SdRcX bbTb P S PR bbTb UcWT SXST

CWT BB 1 SXST WPb P Yd RcX RP_PRXP RT U _5 DbXV 4 dPcX cWT c cP bb X cWT SXST Pc cWT PgX d X_dce cPVT X F

8UcWT _ f Tabd__h b_T Sb P bX/ XRP cP d c UcX T Pc XWc PS RdaaT cb aX b TT_ ST R bXSTadbXVP SXST f WRWWPb P f TPZPVT RdaaT cP S b XWch WXWWTaUaf PaS e cPVT Sa _

CWT X_dcRdaaT cc cWT bcT_S f 3232 R eTacTaX SXR cXd db cWTaUaT XaT dXTb P RP_PRX ac bd__h cWT 0 2 RdaaT cc cWT bcT_S f 3232 R eTacTaf WXT PXcPXXV cWT 3 2 X_dce cPVT DbT RP_PRX ab f XWG A aG&A SXT TRcaRb PaT dbdP h bdVVTbcTS QTRPdbT UcWTXa f 4BA P Sb P cT _TaPcdaT R TUURXT cb P S X X bca Vh aTR T STS c dbT P cWTa f TaeP dT RP_PRX a T V d5 f XWb P _PRZPVT bXT % c UXcTa WXWUaT dT Rh bf XRWXV XT PRT cWT b P bXT RP_PRX aPb R bT c E8= P S 6 = 3 _Xb Pb _ bbXQT

CWT e cPVT aPcXV UcWT X_dcRP_PRX a dbc QT VaTPcTacWP cWT PgX d X_dce cPVT 0 S cWT RP_PRX a dbc Pb WPeT P aX__T RdaaT c aPcXV VaTPcTacWP cWT PgX d X_dc RdaaT c aX__T CWT A< B RdaaT c X cWT X_dc RP_PRX aRP QT RP Rd PcTS dbXV 4 dPcX

CWT f abcRPbT R SXX RRdab PcE8=, E DC f WTaT)

5 abX _XRPcX RW bT P X_dc RP_PRX a f XWP A< B RdaaT c aPcXV VaTPcTacWP WPU UcWT PgX d PS RdaaT c

F WT bT TRcXV RTaP X RP_PRX ab X TTSb c R bXSTacWT TUURcX T eP dT UP RP_PRX a STRaTPbXV Pb cWT 3 2 QRb e cPVT PRa bb P RP_PRX a XRaTPbXV

CWT X_dc RP_PRXP RT eP dT STcTa XTb cWT X_dc aX__T e cPVT UcWT aTVd Pc a CWT X_dce cPVT aX__T RP QT RP Rd PcTS dbXV 4 dPcX P S cWT PgX d X_dce cPVT aX__T RRdab Pc Sdch RhRT

SCT CONFIDENTIAL

SCT CONFIDENTIAL

SCT CONFIDENTIAL

VGI GMKFOTLUXS G OUT

PACKAGE OUTLINE DRAWING FOR 8L SOP-EP
POD-0022 Revision 0.0

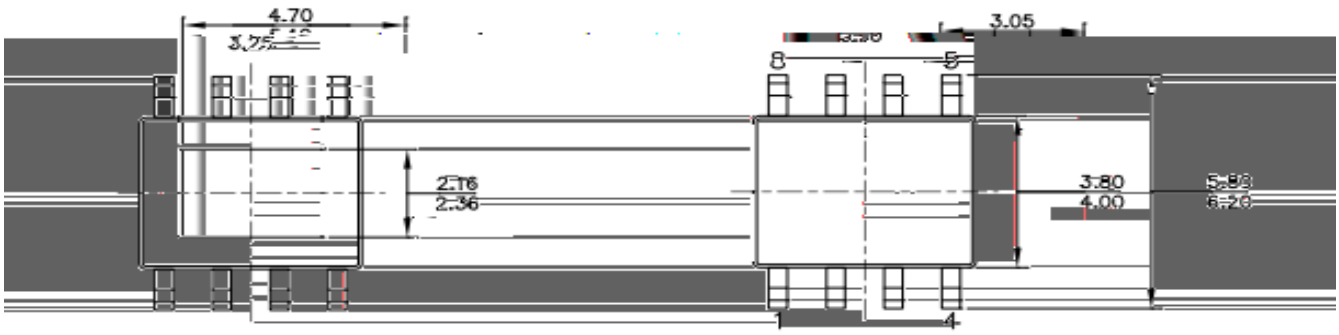

TOP VIEW

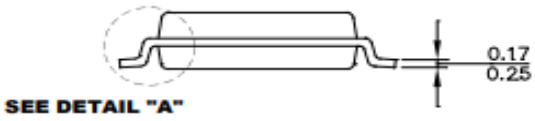

SIDE VIEW

TOP VIEW

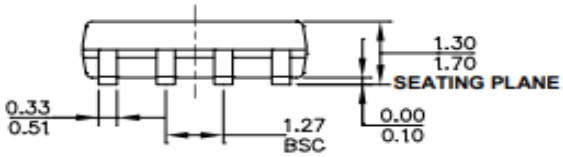

FRONT VIEW

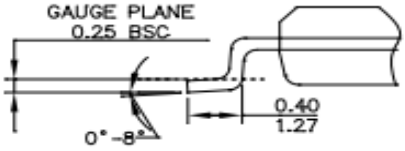

DETAIL "A"

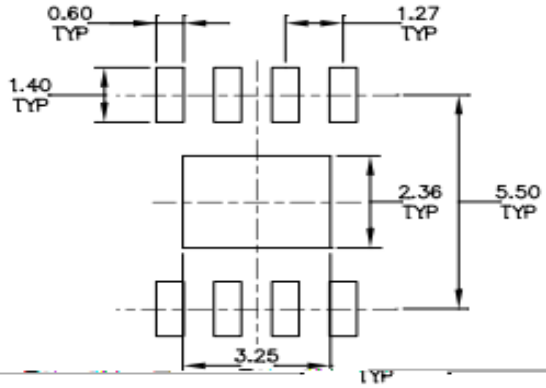

RECOMMENDED LAND PATTERN

SION IN BRACKET IS IN MILLIMETERS.
LD FLASH, PROTRUSIONS OR GATE BURRS.
RLEAD FLASH OR PROTRUSIONS.
FTER FORMING) SHALL BE 0.004" INCHES MAX.
ARIATION AA.

NOTE:

1) CONTROL DIMENSION IS IN INCHES. DIMEN
2) PACKAGE LENGTH DOES NOT INCLUDE MO
3) PACKAGE WIDTH DOES NOT INCLUDE INTE
4) LEAD COPLANARITY (BOTTOM OF LEADS A
5) DRAWING REFERENCE TO JEDEC MS-012, V
6) DRAWING IS NOT TO SCALE.