3.8V-36V Vin, 5A, High Efficiency Synchronous Step-down DCDC Converter with Programmable Soft-start Time

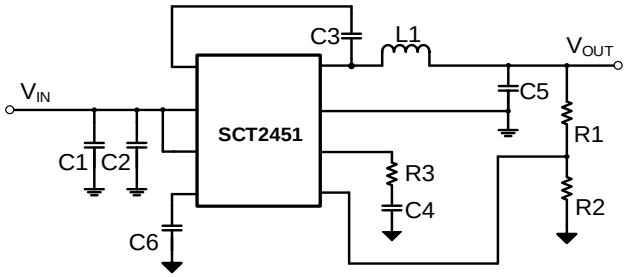

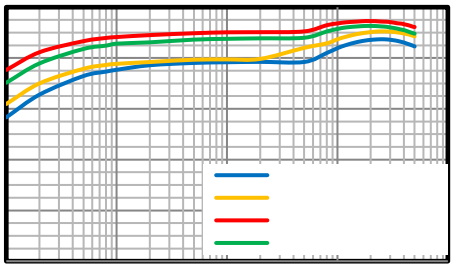

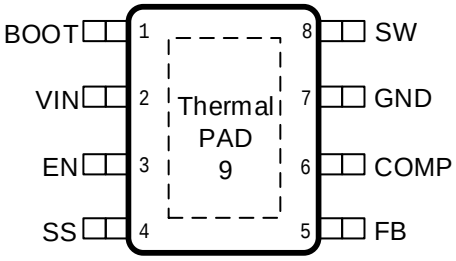

(1)

(2)
(3)

		, YH W L SXWR WKH WD V FR GXFW FH H R DP SOLH KH WS R H W DOHHG DFN HVLWR GLYLGH I RP WKH RXWSXW VHW WKH RXWSXWYROW H KH GHYLFH H XOWV YROW H WR WKH L W DOHH H FH YDOXH R WSLFDO

(1)
(2)

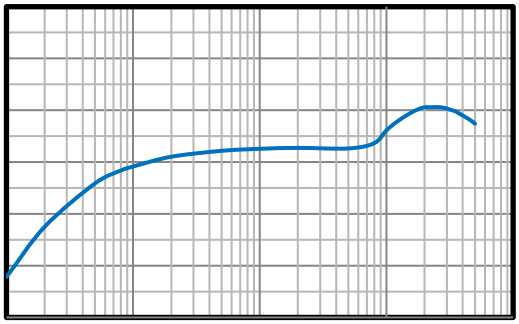

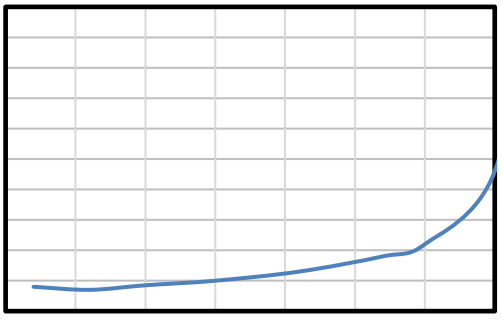

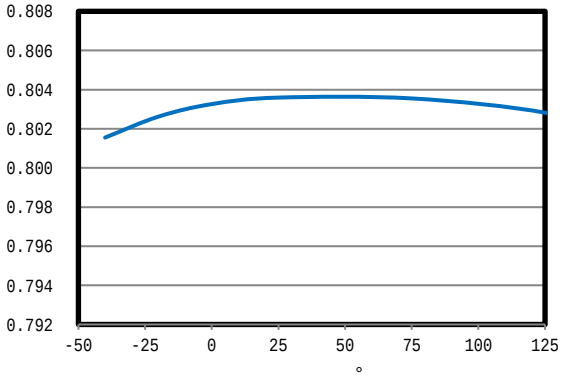
0.808
0.806
0.804
0.802
0.800
0.798
0.796
0.794
0.792
-50
-25
0
25
50
75
100
125
°

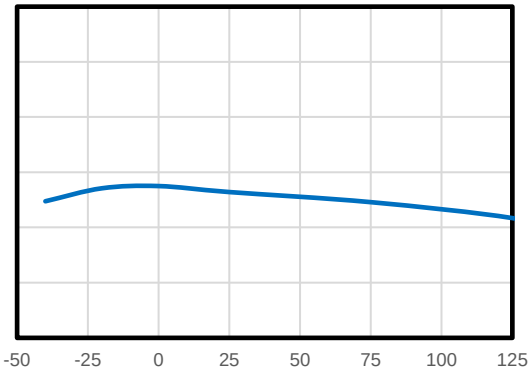
-50
-25
0
25
50
75
100
125

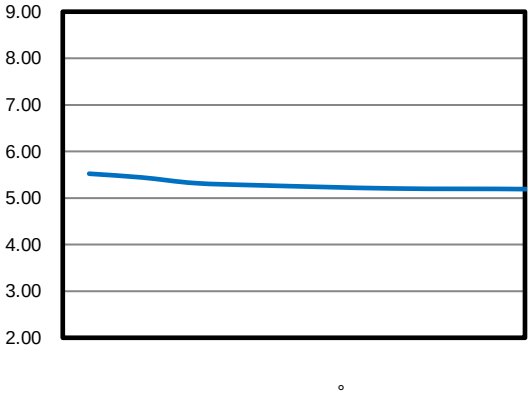
9.00
8.00
7.00
6.00
5.00
4.00
3.00
2.00
°

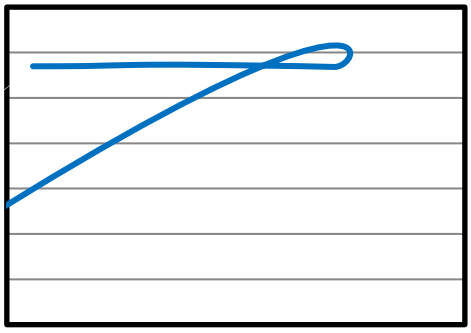

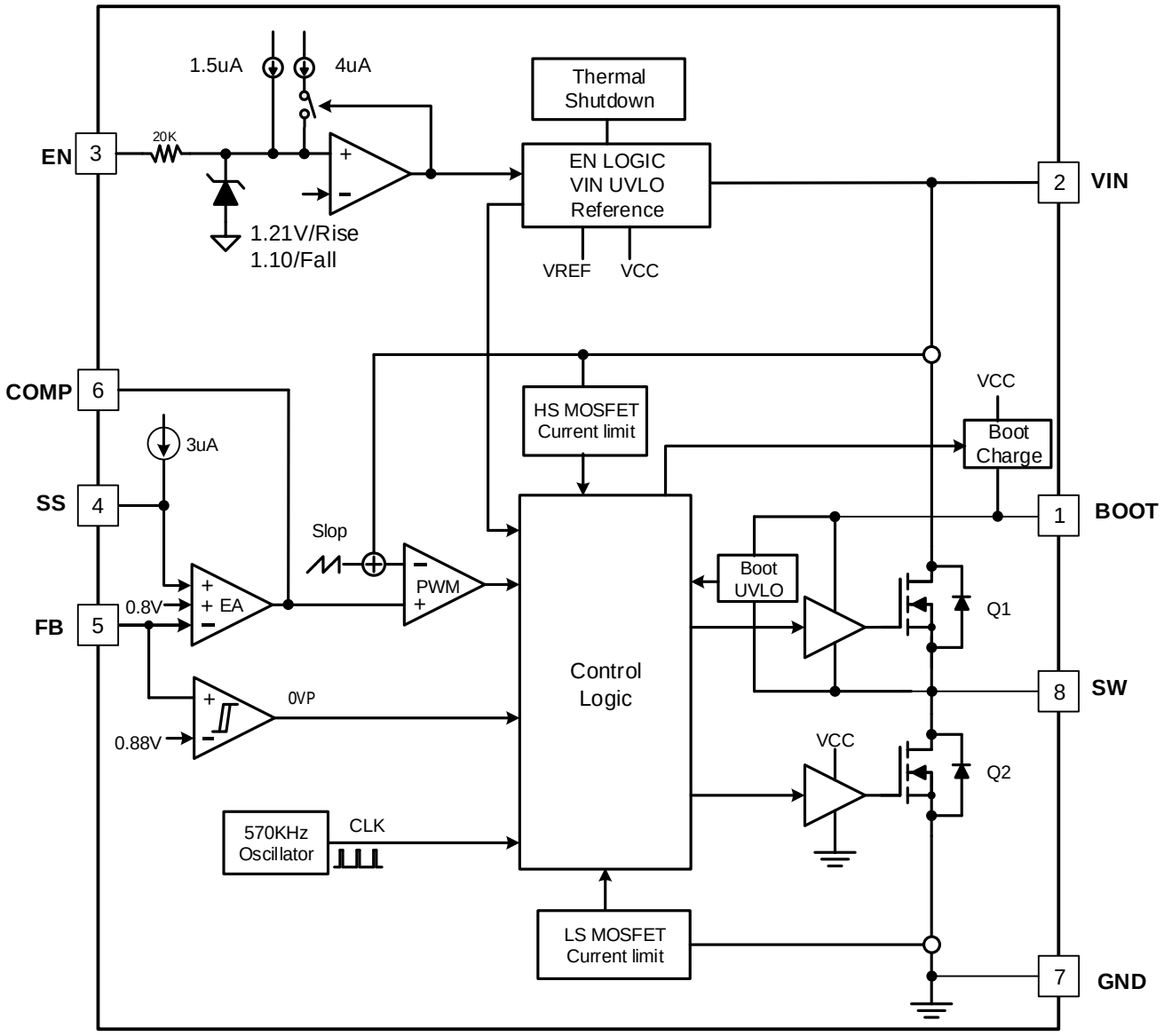
1.5uA
4uA
Thermal Shutdown
EN
3
20K
EN LOGIC
VIN UVLO
Reference
2
VIN
1.21V/Rise
1.10/Fall
VREF
VCC
COMP
6
VCC
HS MOSFET
Current limit
Boot Charge
3uA
SS
4
1
BOOT
Slop
PWM
Boot UVLO
0.8V
EA
FB
5
Q1
Control Logic
8
SW
0VP
0.88V
VCC
Q2
570KHz Oscillator
CLK
LS MOSFET
Current limit
7
GND

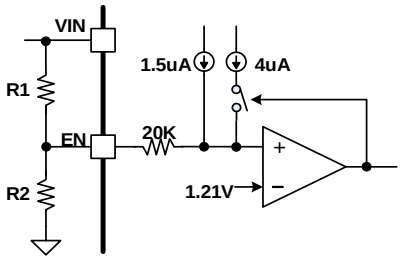
VIN
R1
EN
R2
1.5uA
4uA
20K
1.21V
+
−

±

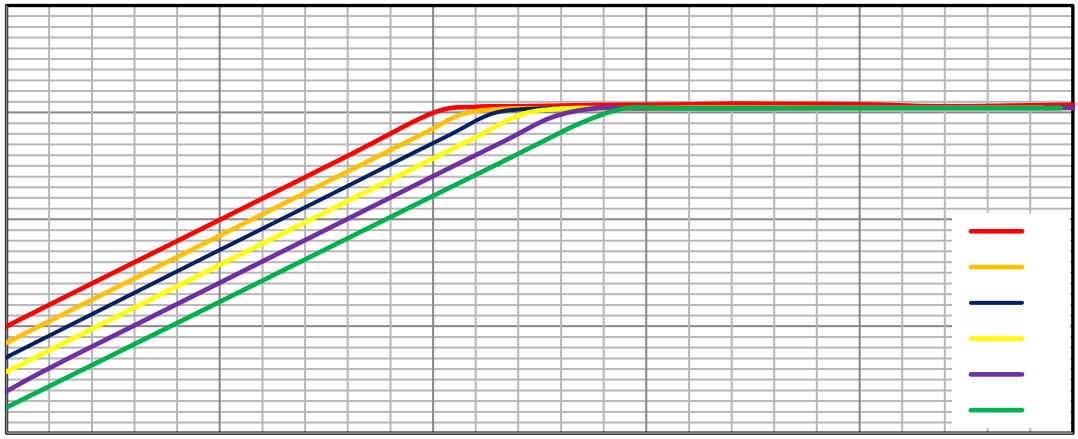

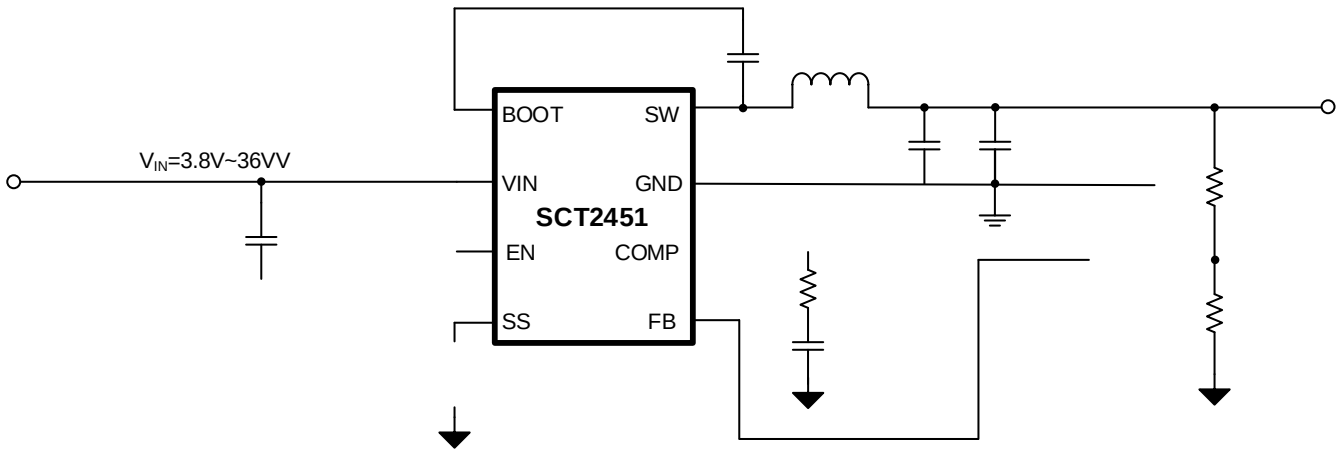

36

	24V Normal 3.8V to 36V
	16.5mV
	Vout = 135mV

Table 1. R_5, R_6 Value for Common Output Voltage (Room Temperature)

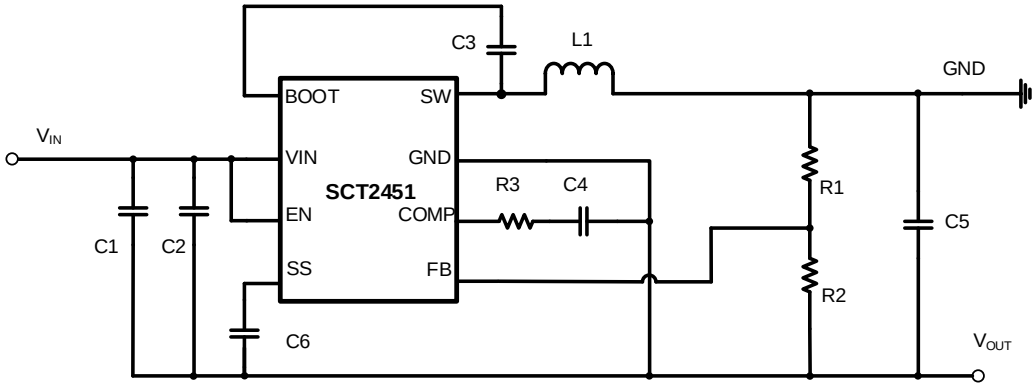
C3
L1
GND
BOOT
SW
VIN
VIN
GND
SCT2451
R3
C4
R1
EN
COMP
C5
C1
C2
SS
FB
R2
C6
VOUT

1.

2.

3.

4. KH RWRP OD H LVD OD H RX GSOD HFR HFWG WR WKH RX GSOD HR WRS OD H YLDV

VRQH HG WR WKH RD GIR P HFKD LFDOWH WR D G HOD LOW XVL P XOWDSH WKH P DOYLDV X GH HDWK WKH WKH P DOSDG ,P S RSH VRQH L WKH P DOSDG WR RX G SOWWR LOFDXVH KL KH L L D GRYH VKRRW HVLGHVGR DGL WKH P DOSHIR P D FH LWLV HFRP P H GHG P LOGLDP HWW G LOKRQVR WKH P DO YLDV XVD VP DOH YLD RIH V HWV LVNR VRQH YRXP H HWV DSSOFDWR V KH H VRQH YRXP H HWV WR X WKH YLDV LVR FR FH SOX L R WW WV FD H XVHG WR DFKLHYH D HSHDWD HS RFHVV

5.

6.

7.

8.

9.

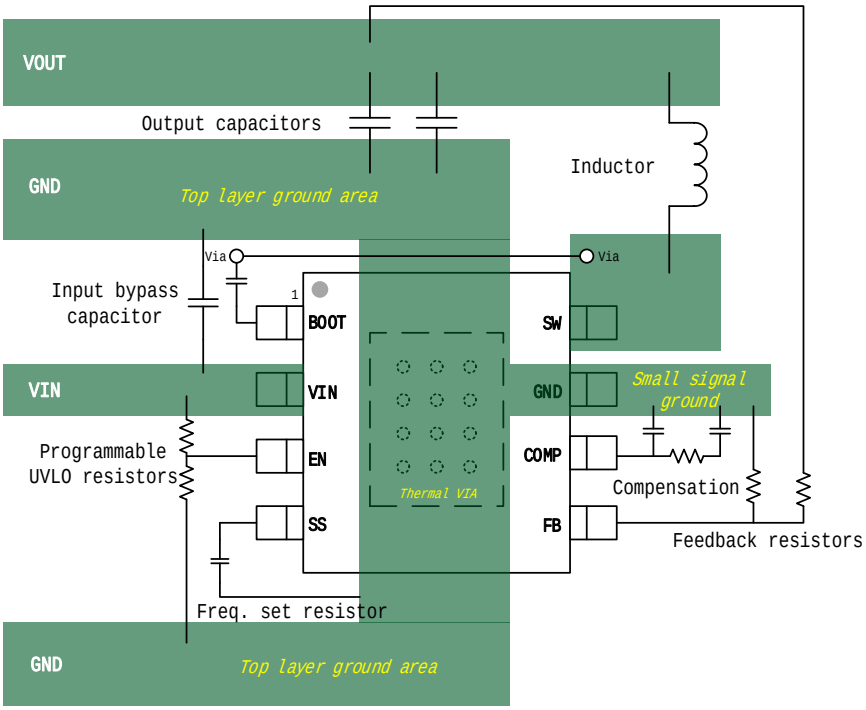

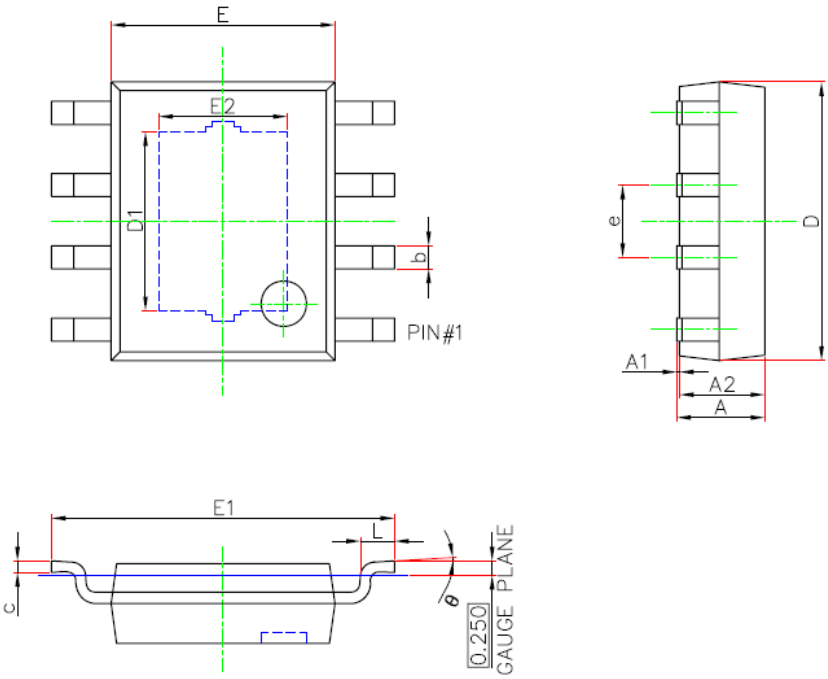

θ				

1.
2.
3.
4.
5.
6.

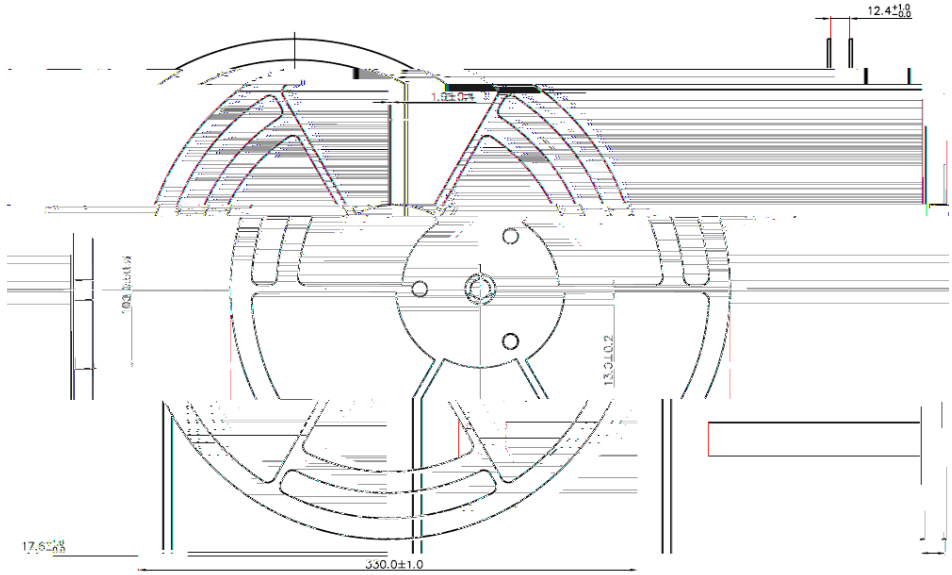
12.4
13.3±0.2
330.0±1.0

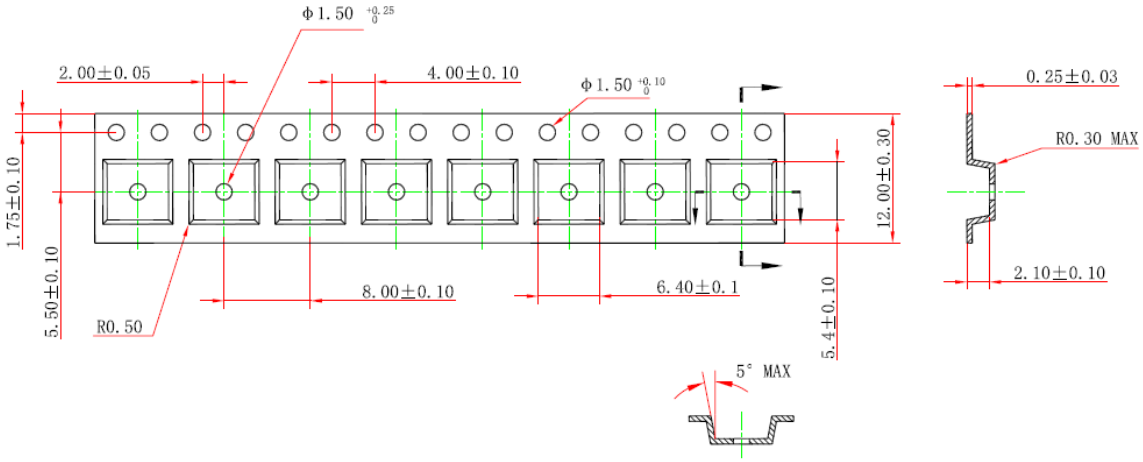
φ1.50
2.00±0.05
4.00±0.10
φ1.50
0.25±0.03
R0.30 MAX
1.75±0.10
12.00±0.30
5.50±0.10
R0.50
8.00±0.10
6.40±0.1
5.4±0.10
2.10±0.10
5° MAX

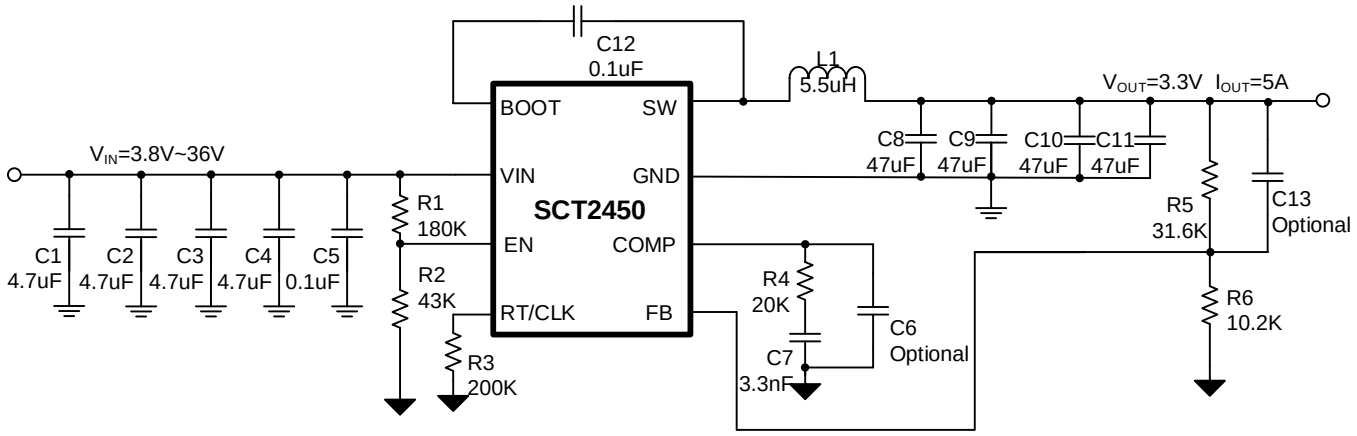
C12
0.1uF
L1
5.5uH
V_{OUT}=3.3V I_{OUT}=5A
BOOT
SW
VIN
GND
SCT2450
EN
COMP
RT/CLK
FB
V_{IN}=3.8V~36V
C1
4.7uF
C2
4.7uF
C3
4.7uF
C4
4.7uF
C5
0.1uF
R1
180K
R2
43K
R3
200K
C8
47uF
C9
47uF
C10
47uF
C11
47uF
R4
20K
C7
3.3nF
C6
Optional
R5
31.6K
C13
Optional
R6
10.2K