Wide Vin 50V Non-synchronous Boost/Flyback/SEPIC Controller

FEATURES

-
-
-
-
-
-
-
-
-
-
-
-
-
-

DESCRIPTION

APPLICATIONS

-
-
-
-

TYPICAL APPLICATION

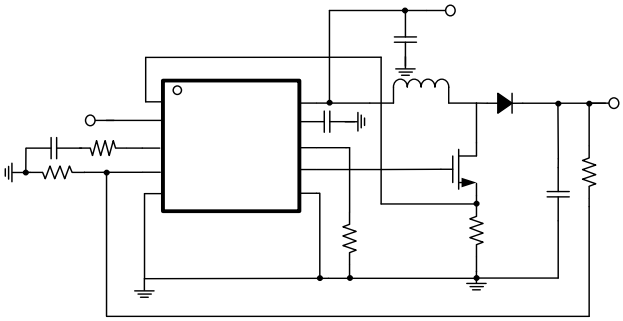

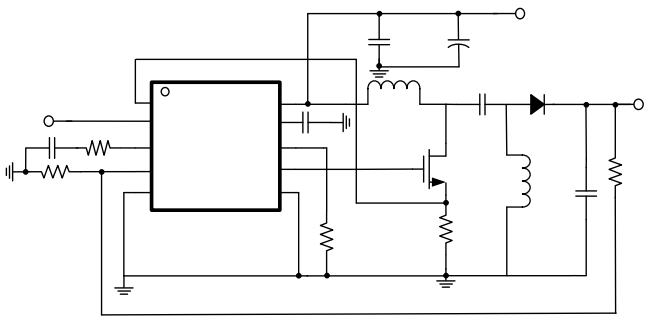

REVISION HISTORY

DEVICE ORDER INFORMATION

ABSOLUTE MAXIMUM RATINGS

			è
			è

PIN CONFIGURATION

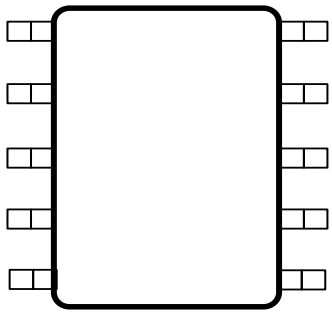

PIN FUNCTIONS

PIN FUNCTIONS (continued)

RECOMMENDED OPERATING CONDITIONS

ESD RATINGS

THERMAL INFORMATION

ELECTRICAL CHARACTERISTICS

ELECTRICAL CHARACTERISTICS (continued)

V				
V				

TYPICAL CHARACTERISTICS

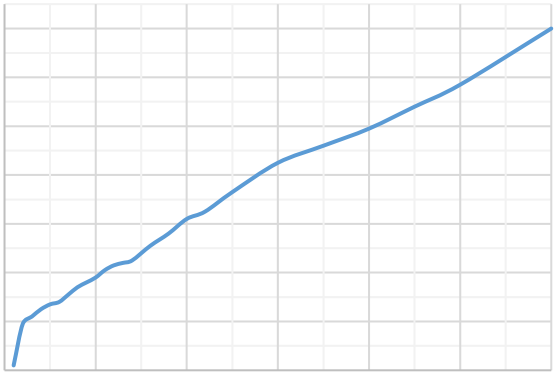

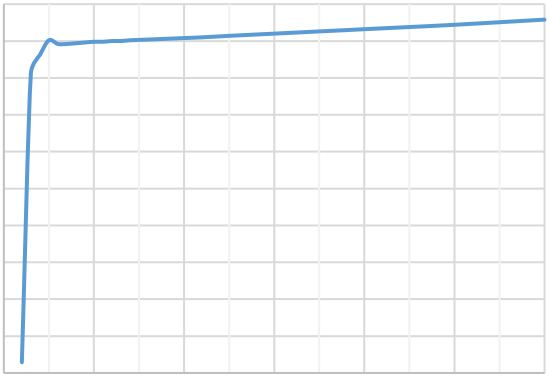

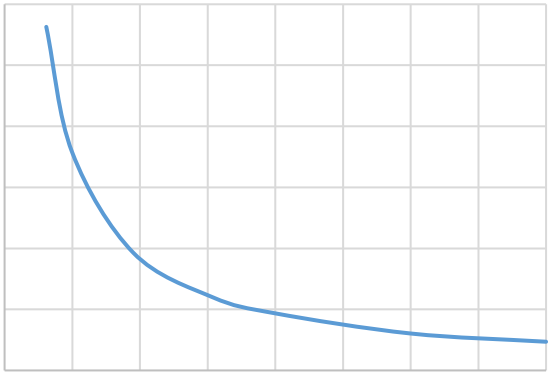

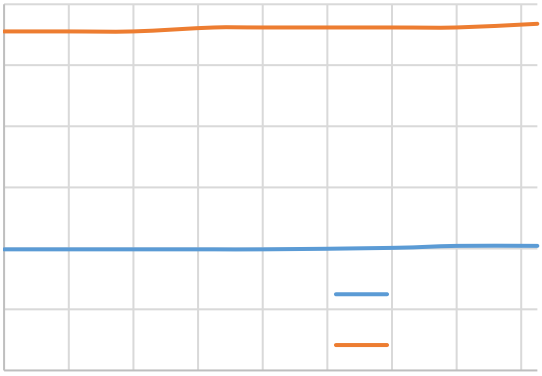

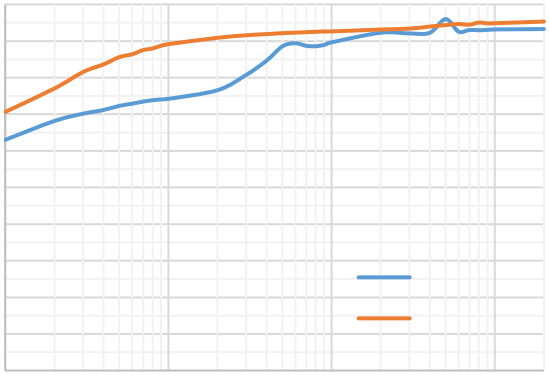

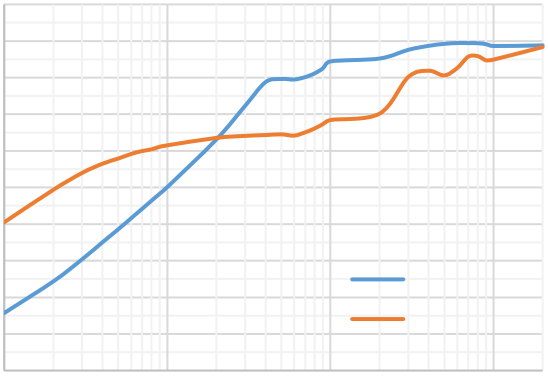

TYPICAL CHARACTERISTICS

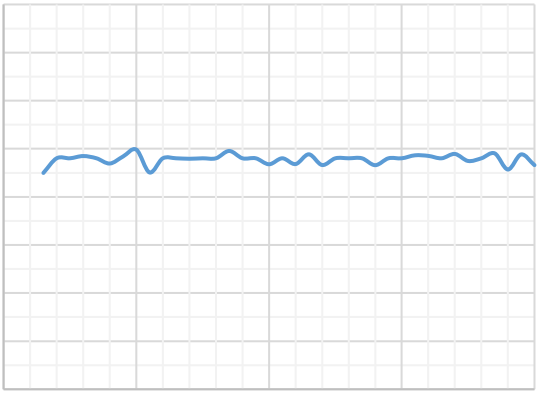

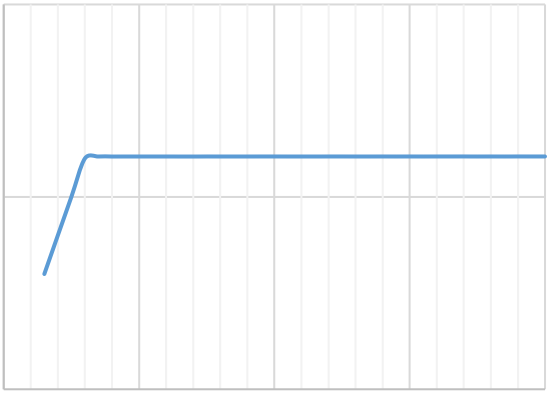

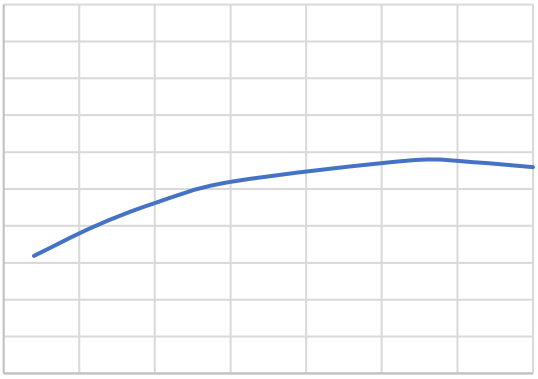

°

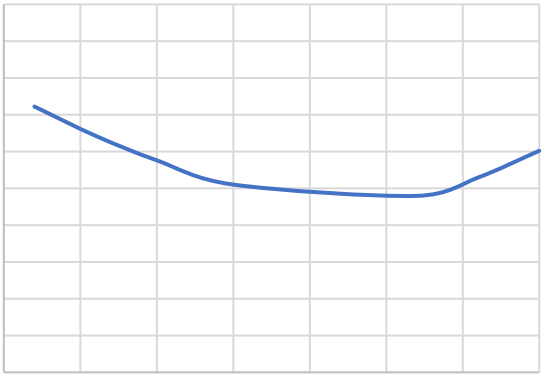

°

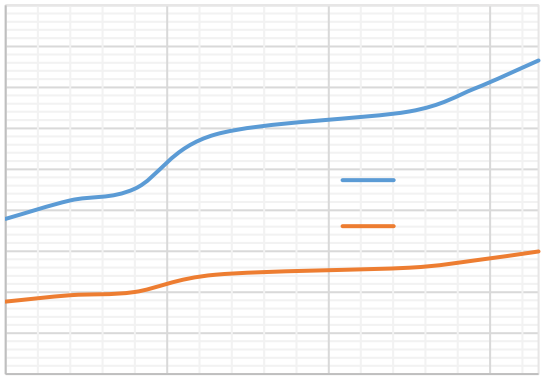

°

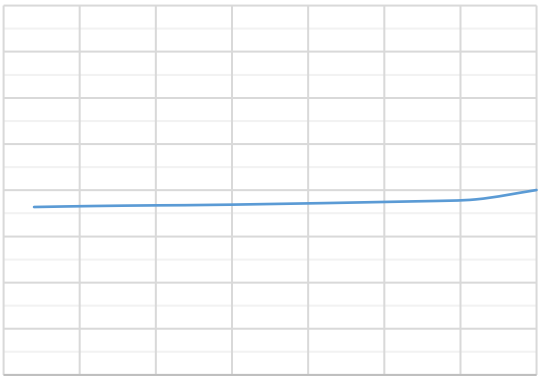

°

OPERATION

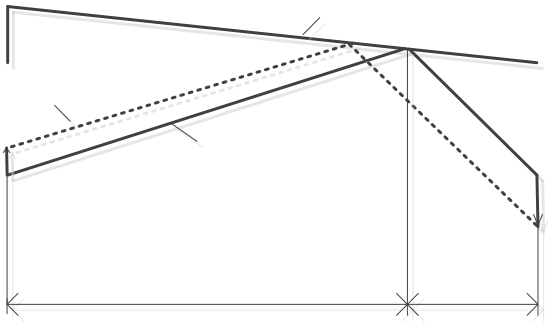

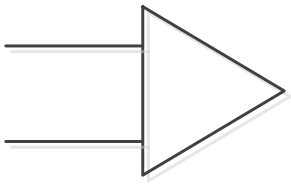

$_{L\,FI} = ''$

$= \quad _{HG}$

$- \quad = - \quad _{H}$

$= \quad _{HG} \qquad = \quad KG$

$= \quad _{H} \qquad = \quad HNM - \quad KG$

$$\Delta \quad _{L\,FI} = - \frac{-}{+} \quad \Delta \quad _{L\,FI}$$

$$\Delta \quad _{L\,FI} = - \frac{\quad}{\quad} \quad \Delta \quad _{L\,FI} = - \frac{\square}{-\square} \quad \Delta \quad _{L\,FI}$$

$= \quad _{L}$

$= \quad + \quad _{L}$

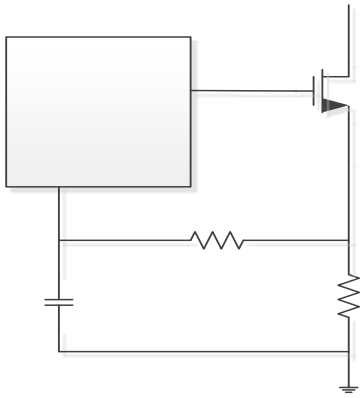

$'' \quad = \dfrac{- \quad N \times \quad \times \square}{}$

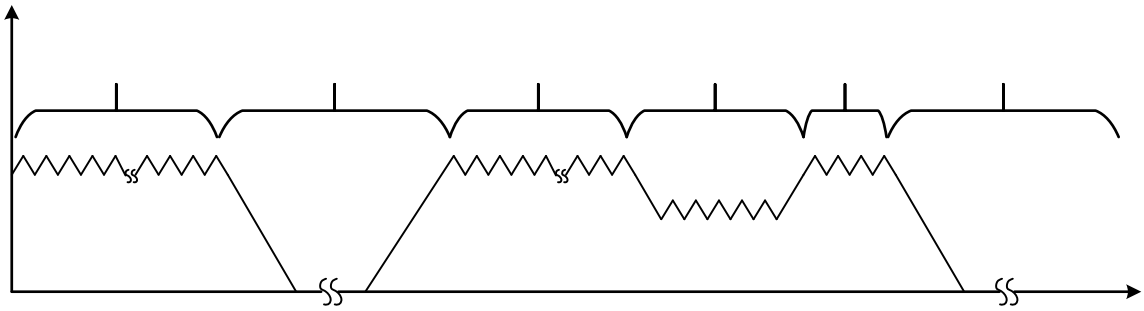

$$= \frac{-}{} \times$$

$$\Omega = \frac{}{} -$$

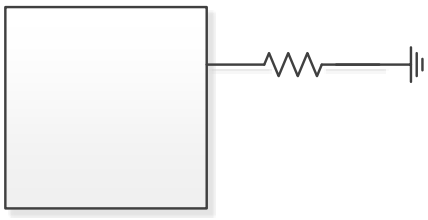

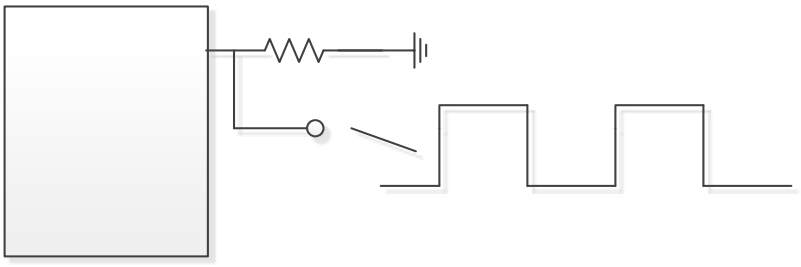

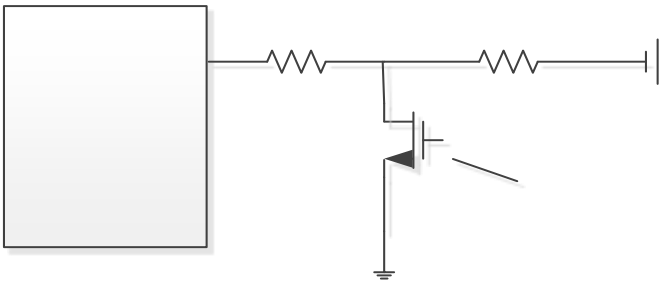

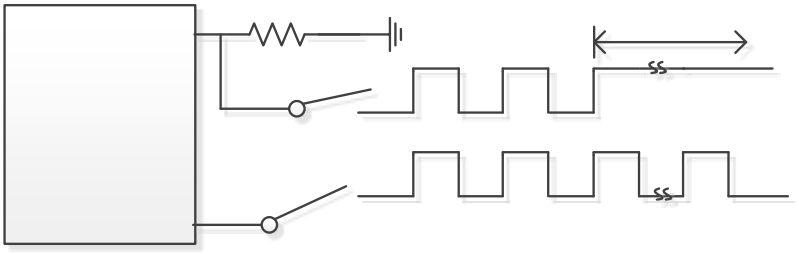

$$= \frac{\text{″} \quad - \text{″}}{\text{″}}$$

$$= \frac{}{\text{″} \quad -}$$

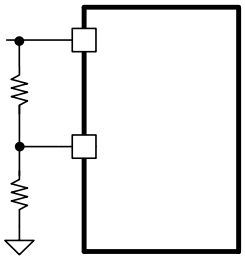

APPLICATION INFORMATION

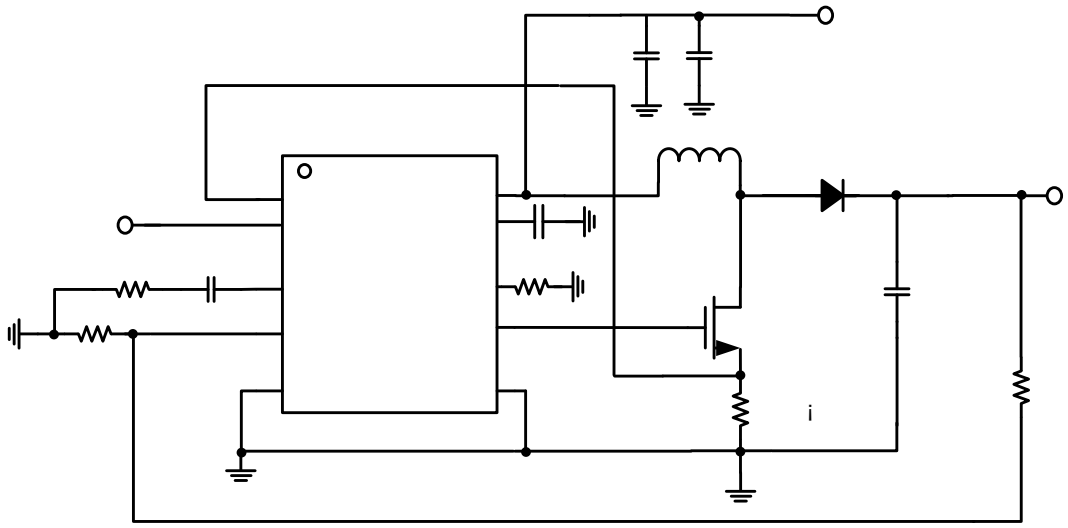

$$= \frac{\quad - \quad \times \quad}{\sqrt{\quad} \times \quad \times \quad \times \quad LP}$$

$$''_{\square} = \frac{''}{-\square} + \Delta''$$

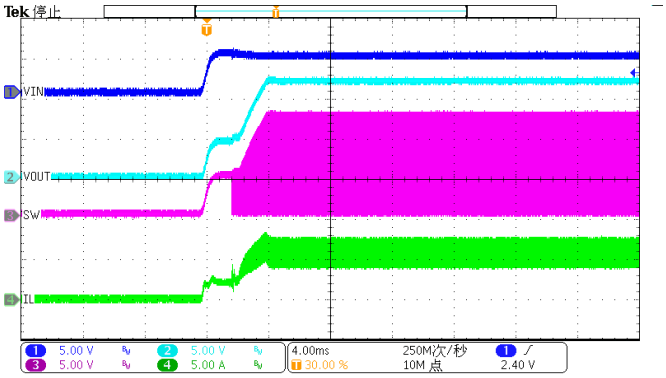
Tek 停止
VIN
VOUT
SW
IL
5.00 V
5.00 V
5.00 V
5.00 A
4.00ms
30.00 %
250M次/秒
10M 点
2.40 V

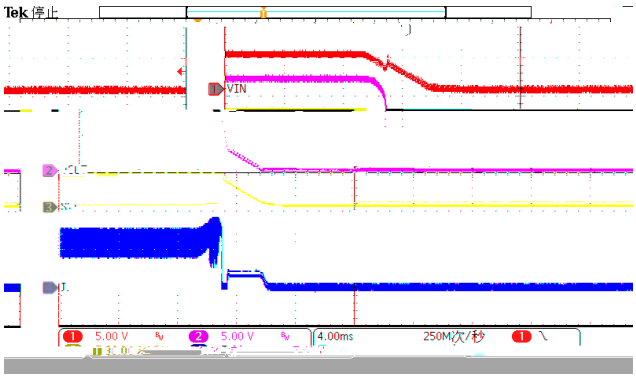
Tek 停止
VIN
5.00 V
5.00 V
4.00ms
250M次/秒

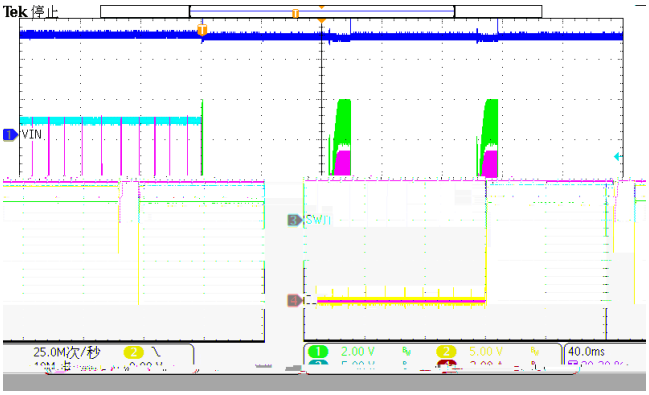
Tek 停止
VIN
SW
25.0M次/秒
2.00 V
5.00 V
40.0ms

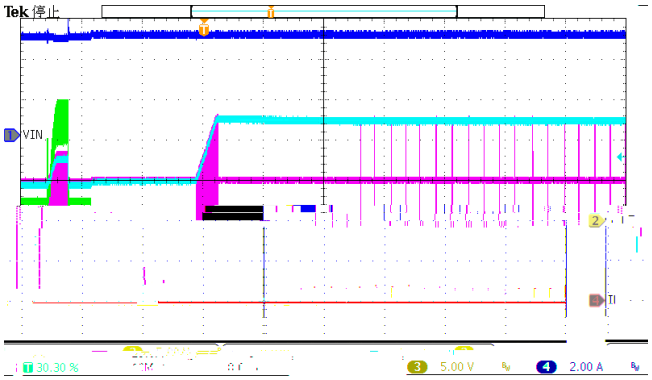
Tek 停止
VIN
30.30 %
5.00 V
2.00 A

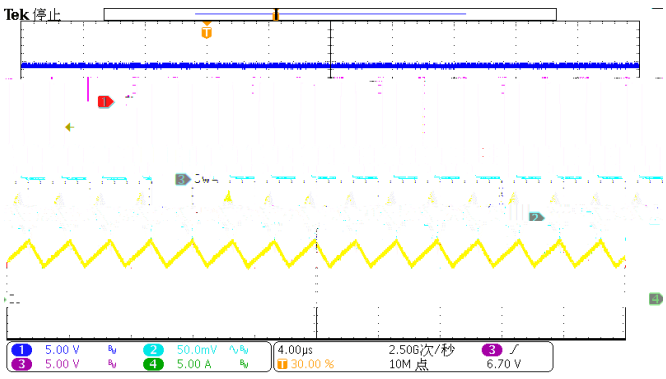
Tek 停止
5.00 V
5.00 V
50.0mV
5.00 A
4.00µs
30.00 %
2.50G次/秒
10M 点
6.70 V

APPLICATION INFORMATION

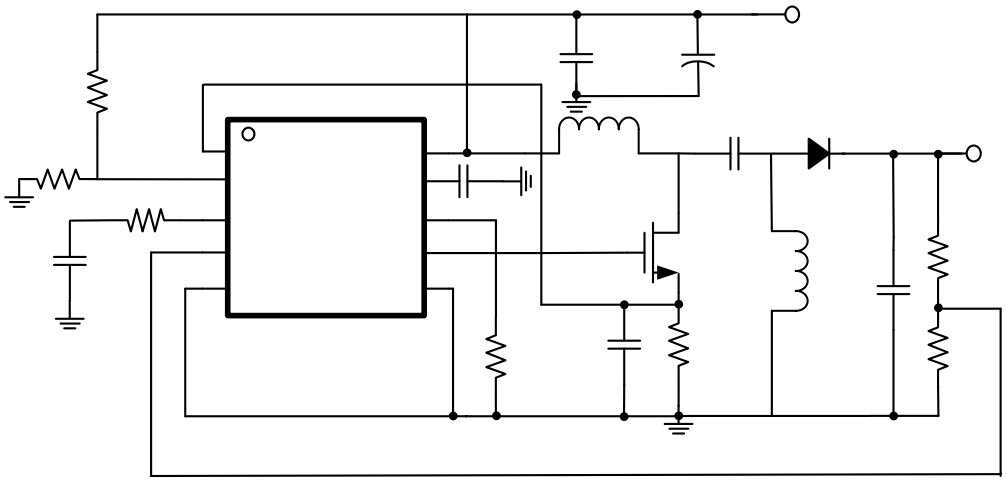

$$\Delta'' = ''_{\,''} \times \qquad '' \times \frac{}{'' \quad ''} \times$$

$$\Delta'' = '' \times \qquad '' \times$$

$$= \quad = \quad \frac{'' \quad ''}{\Delta'' \times} \times \square$$

$$'' \qquad = ''_{\,''} + \frac{\Delta''}{} = '' \times \frac{}{'' \quad ''} \times \quad + \frac{}{}$$

$$'' \qquad = '' + \frac{\Delta''}{} = '' \times \quad + \frac{}{}$$

$$= \quad = - \quad \frac{'' \quad ''}{\times \Delta'' \times} \times \square$$

$$= \; '' + \quad + \; \square$$

$$'' \qquad = '' \qquad + ''$$

$$'' \qquad = '' \times \sqrt{\frac{\left(\quad + \; '' \quad '' + \; \square \right) \times \left(\quad + \; \square \right)}{'' \quad ''}}$$

$$\square'' = '' \qquad \times \; \square \qquad \times \square \qquad + \left(\quad + \; '' \quad '' \right) \times '' \qquad \times \frac{\times}{''}$$

$$\square = \text{″} +$$

$$\Delta = \frac{\text{″} \times \square}{\times}$$

$$\text{″} = \text{″} \times \sqrt{\frac{+ \square}{\text{″} \quad \text{″}}}$$

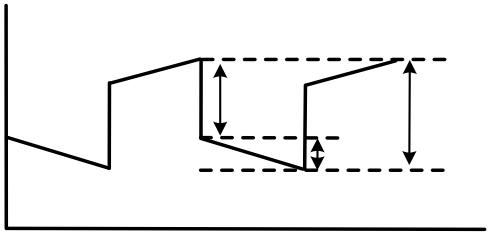

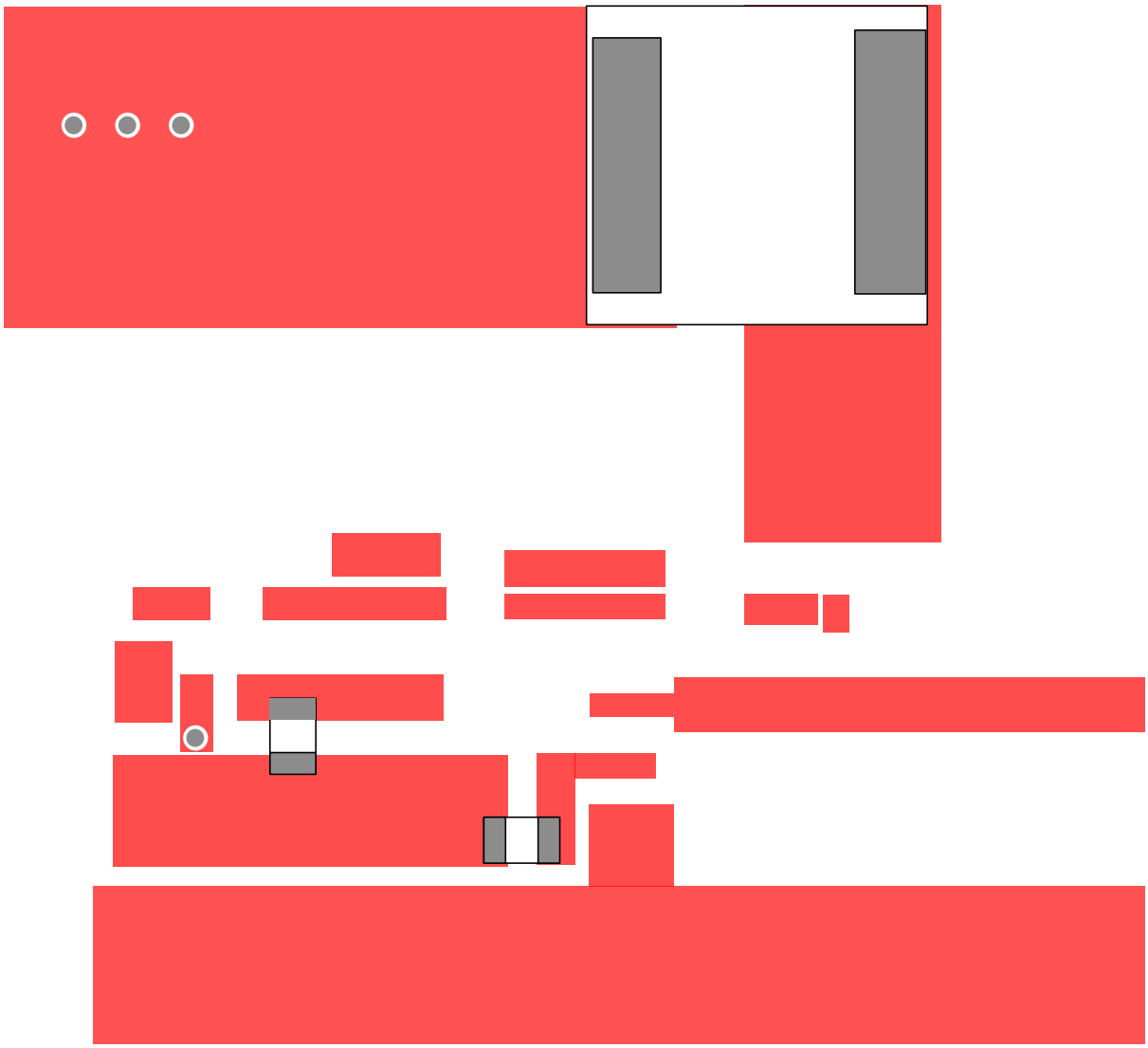

PACKAGE INFORMATION

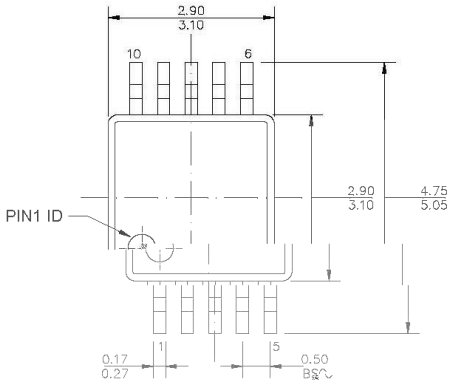

TOP VIEW

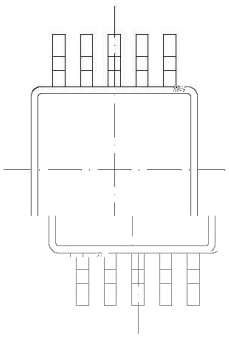

BOTTOM VIEW

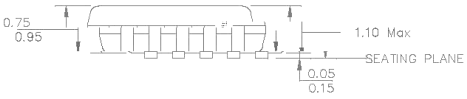

FRONT VIEW

SIDE VIEW

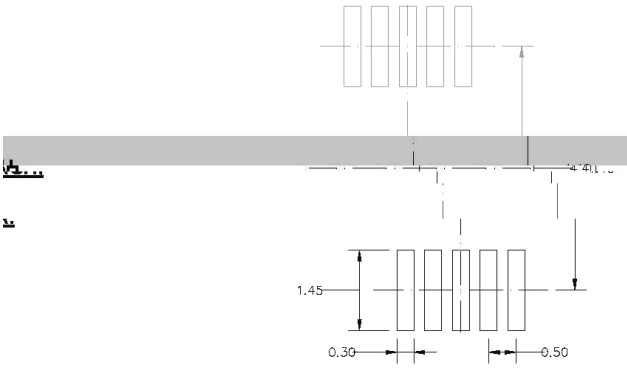

RECOMMENDED LAND PATTERN

NOTE:

1) ALL DIMENSIONS ARE IN MILLIMETERS.
2) PACKAGE LENGTH DOES NOT INCLUDE MOLD FLASH, PROTRUSION OR GATE BURR.
3) DRAWING MEETS JEDEC MO-187, VARIATION BA.
4) DRAWING IS NOT TO SCALE.
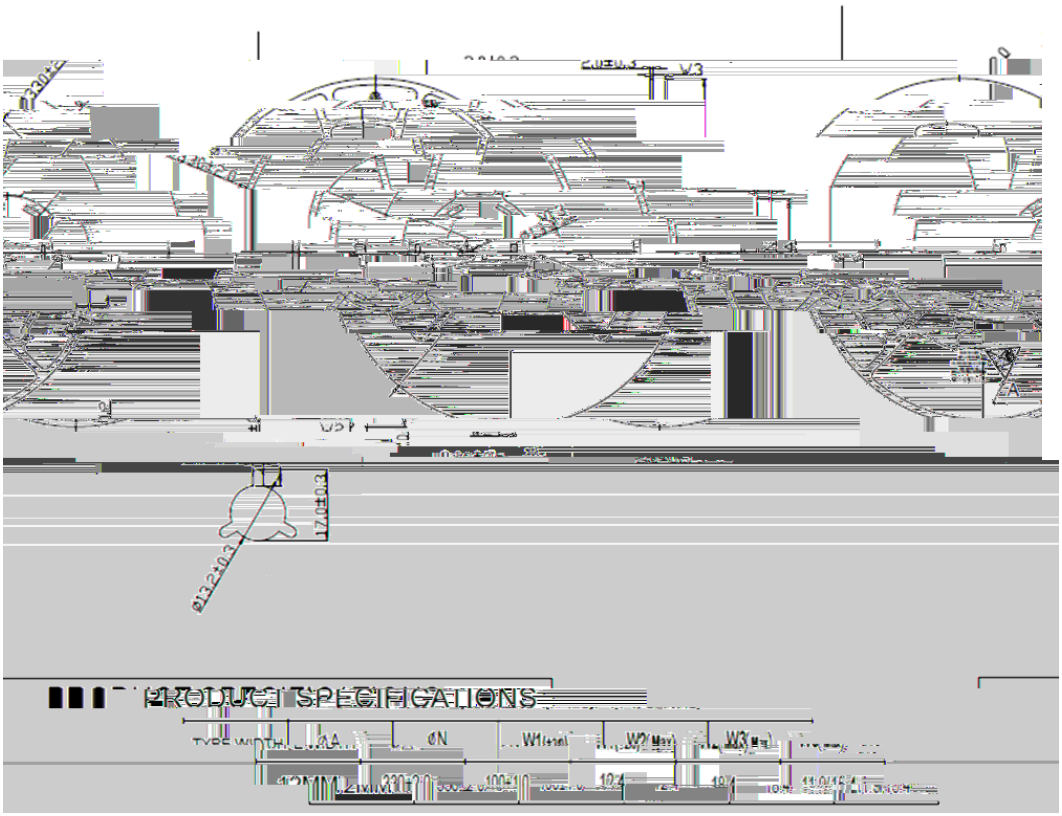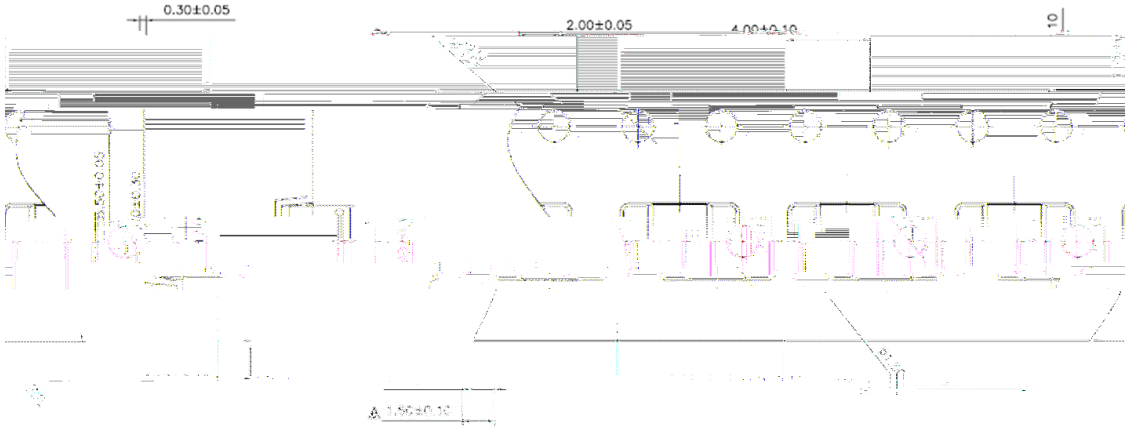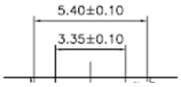
TAPE AND REEL INFORMATION