-
-
-
  -
  -
-
  -
  -
-
-
-
-
-
-
-
-

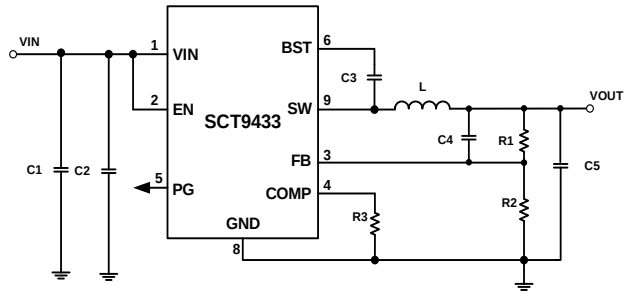

Efficiency vs Output Current

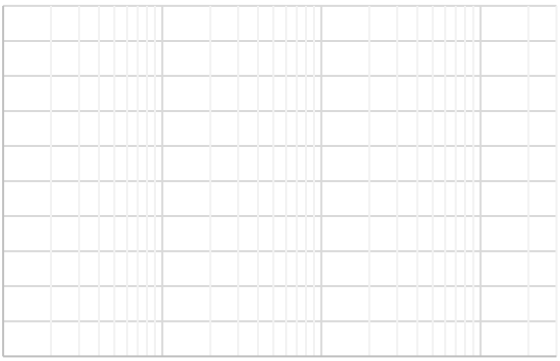

Over operating free-air temperature unless otherwise noted[1]

DESCRIPTION	MIN	MAX	UNIT
BST	-0.3	48	V
VIN, SW, EN	-0.3	40	V
FB, COMP	-0.3	6	V
BST-SW	-0.3	6	V
Operating junction temperature[2]	-40	125	C
Junction temperature	-40	150	C
Storage temperature T_{STG}	-65	150	C

(1)

(2)

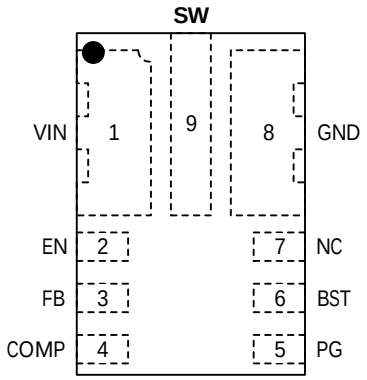

Top View: FCQFN2X3-9L

VIN	1	Power supply input. Must be locally bypassed.
EN	2	Enable logic input. Floating the pin enables the device. This pin supports high voltage input up to VIN supply to be connected VIN directly to enable the device automatically. The device has precision enable thresholds 1.18V rising / 1.1V falling for programmable UVLO threshold and hysteresis.
FB	3	Buck converter output feedback sensing voltage. Connect a resistor divider from VOUT to FB to set up output voltage. The device regulates FB to the internal reference of 0.8V typical.
COMP	4	Compensation pin. Connect this pin to GND with a 1KΩ resistor for internal compensation. Add an RC network to adjust the loop response externally. See Loop Response Design for more details.

PG	5	Open drain power-good output that is pulled to GND when the output voltage is out of its regulation limits or during soft-start. There is an internal 5MΩ pull-up resistor.
BST	6	Power supply for the high-side power MOSFET gate driver. Must connect a 0.1uF or greater ceramic capacitor between BST pin and SW node.
NC	7	NC
GND	8	Power ground. Must be soldered directly to ground plane.
SW	9	Switching node of the buck converter.

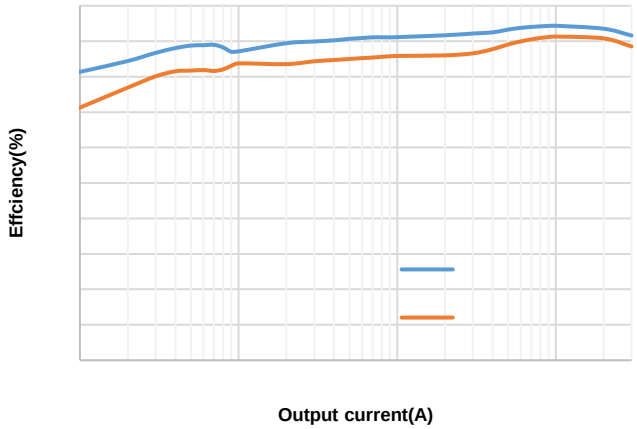
Effciency(%)
Output current(A)

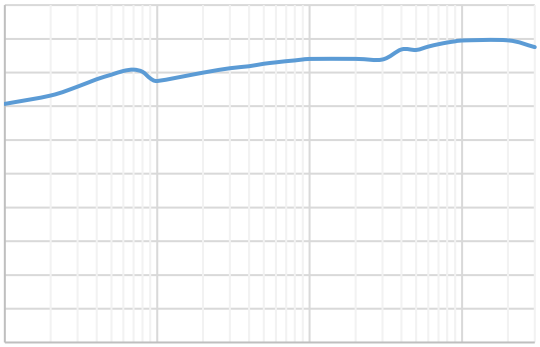

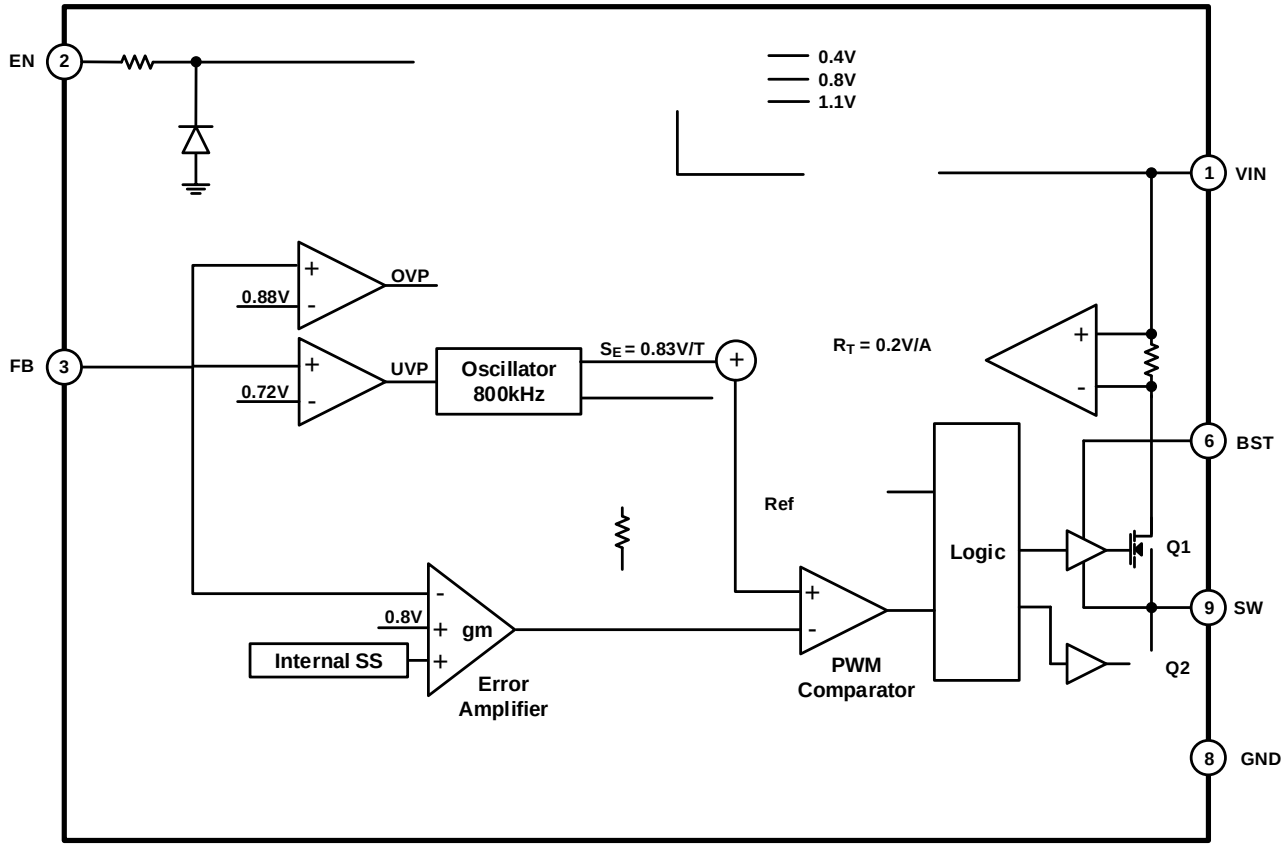
EN
2
0.4V
0.8V
1.1V
1
VIN
OVP
0.88V
FB
3
UVP
0.72V
Oscillator
800kHz
S_E = 0.83V/T
R_T = 0.2V/A
6
BST
Ref
Logic
Q1
9
SW
0.8V
gm
Internal SS
Error
Amplifier
PWM
Comparator
Q2
8
GND

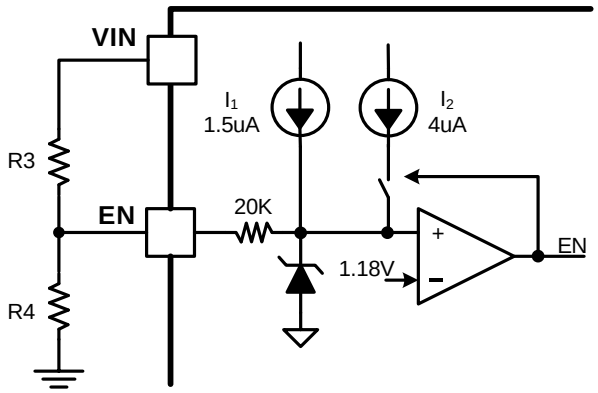

(1)

(2)

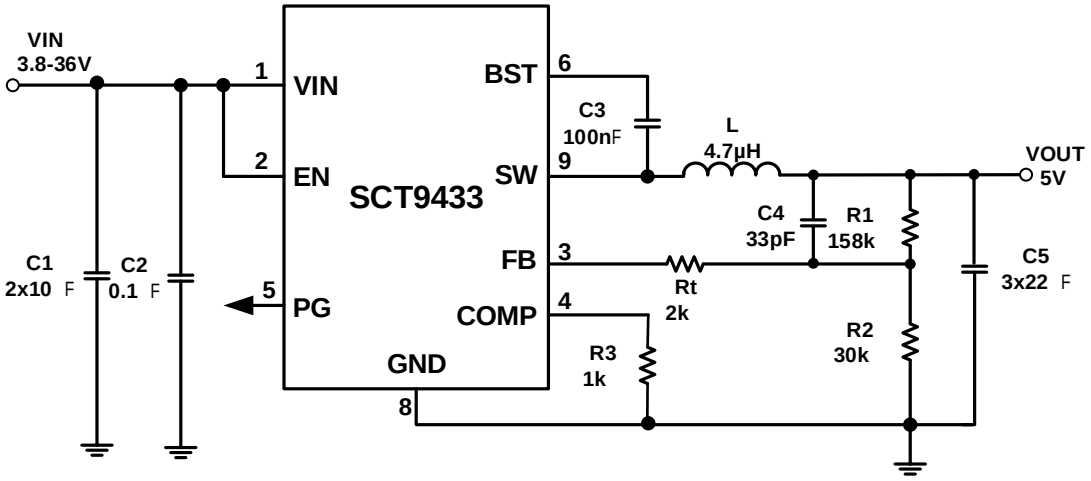

Design Parameters	Example Value
Input Voltage	12V
Output Voltage	5V
Output Current	3A
Output voltage ripple (peak to peak)	±0.03V
Switching Frequency	800kHz

(3)

-
-
-

(10)

(11)

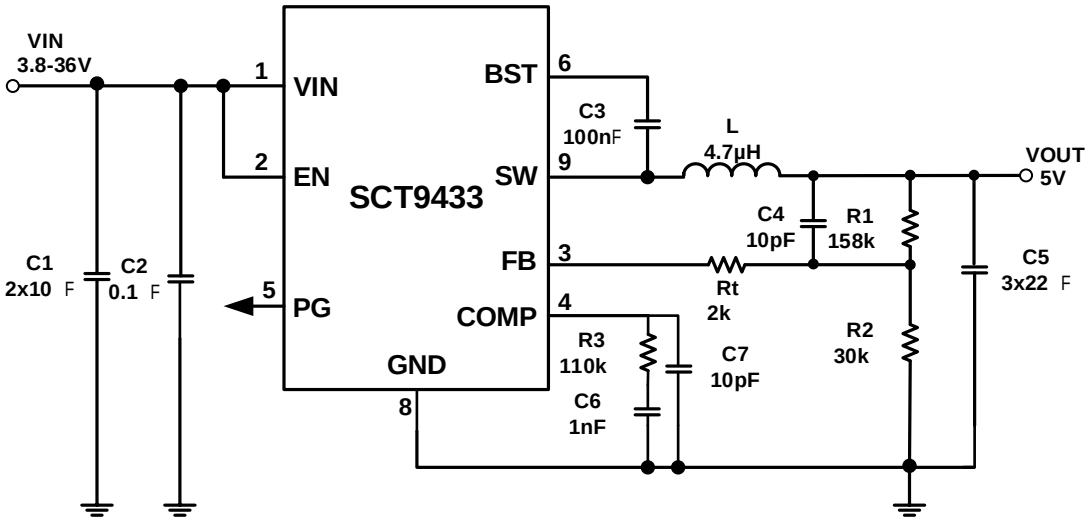
VIN
3.8-36V
1
VIN
2
EN
5
PG
SCT9433
BST
6
SW
9
FB
3
COMP
4
GND
8
C3
100nF
L
4.7μH
VOUT
5V
C4
10pF
R1
158k
Rt
2k
C5
3x22 F
R2
30k
R3
110k
C7
10pF
C6
1nF
C1
2x10 F
C2
0.1 F

-
-
-
-

-
-
-
-
-
-

-
-
-

ω

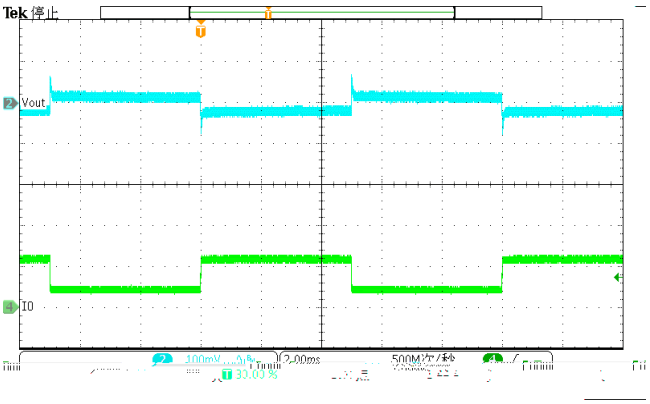
Tek 停止
Vout
IO

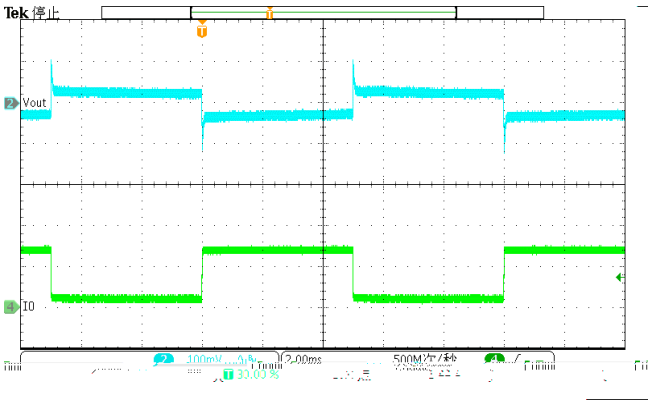
Tek 停止
Vout
IO

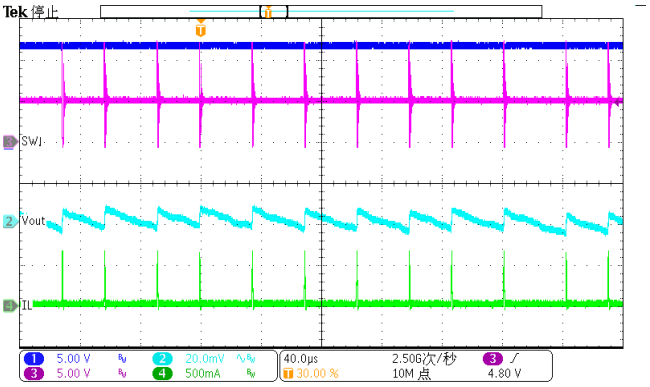
Tek 停止
SW1
Vout
IL
5.00 V
20.0mV
5.00 V
500mA
40.0µs
30.00 %
2.50G次/秒
10M 点
4.80 V

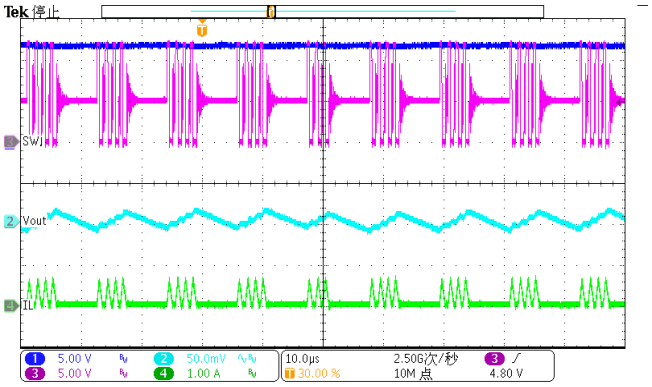
Tek 停止
SW1
Vout
IL
5.00 V
50.0mV
5.00 V
1.00 A
10.0µs
30.00 %
2.50G次/秒
10M 点
4.80 V

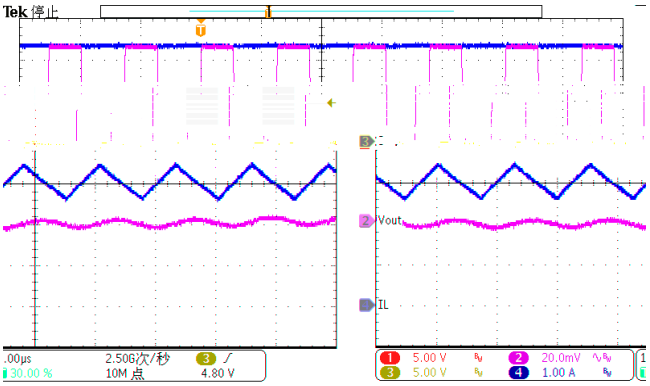
Tek 停止
Vout
IL
2.50G次/秒
10M 点
4.80 V
5.00 V
20.0mV
5.00 V
1.00 A

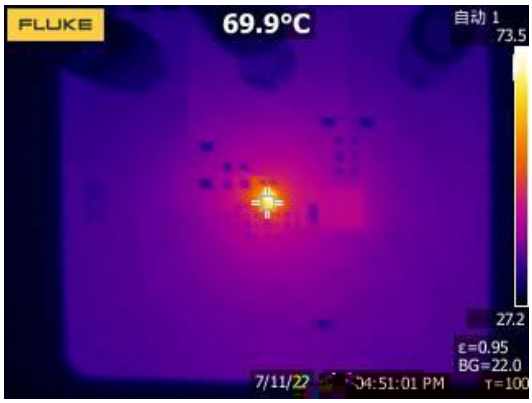
FLUKE
69.9°C
自动 1
73.5
27.2
ε=0.95
BG=22.0
7/11/22
04:51:01 PM

1.

2.
3.
4.
5.
6.
7.

8.

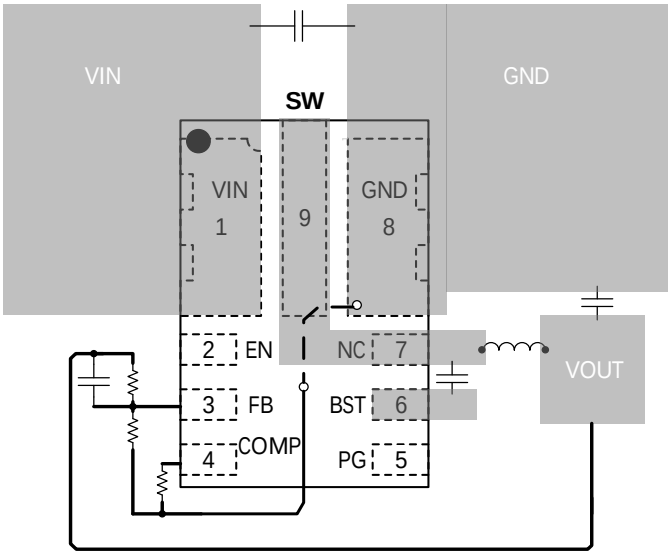
VIN
GND
SW
VIN
1
9
GND
8
2
EN
NC
7
VOUT
3
FB
BST
6
4
COMP
PG
5

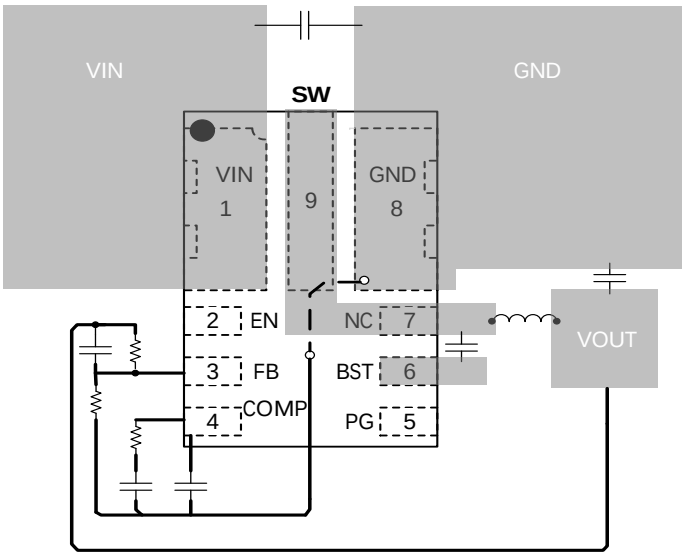
VIN
GND
SW
VIN
1
9
GND
8
2
EN
NC
7
VOUT
3
FB
BST
6
4
COMP
PG
5

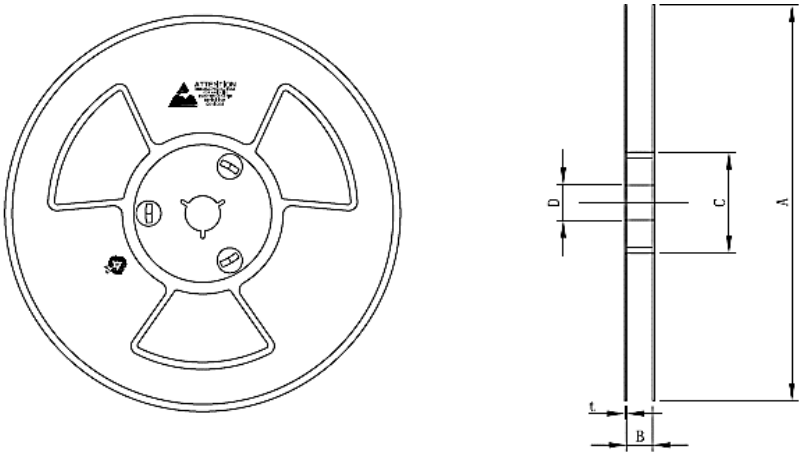
D
C
A
t
B

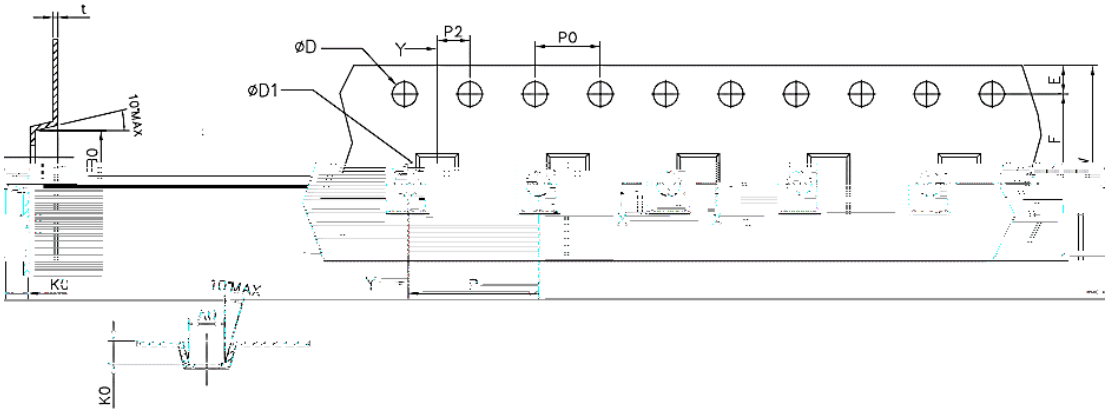
t
10°MAX
E0
ØD
ØD1
Y
P2
P0
E
F
K0
10°MAX
Y
P
W0
K0